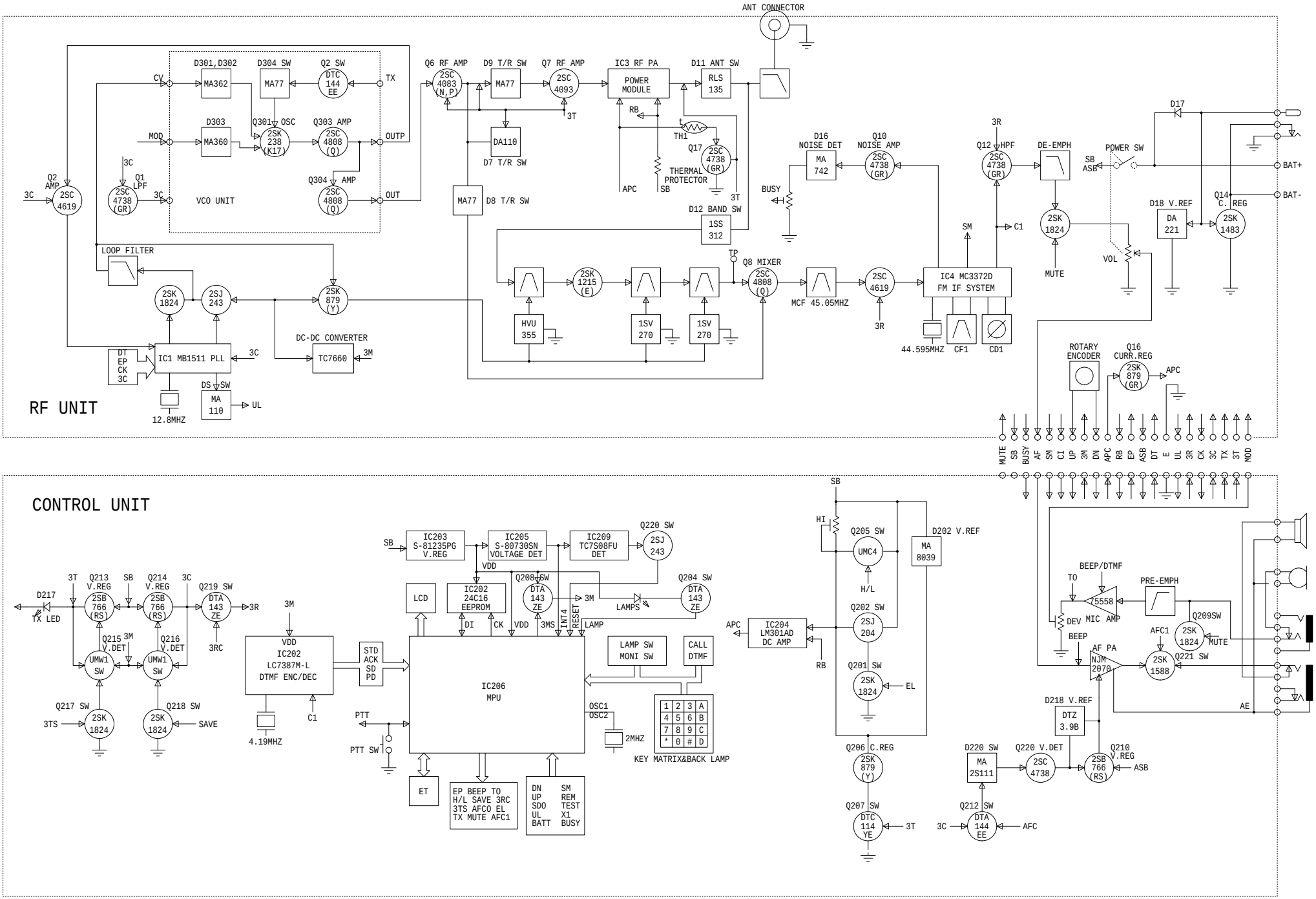

RF UNIT
CONTROL UNIT
ANT CONNECTOR
D301,D302
MA362
D304 SW
MA77
Q2 SW
DTC 144 EE
TX
CV
D303
MA360
Q301 OSC
2SK 238 (K17)
Q303 AMP
2SC 4808 (Q)
OUTP
MOD
Q304 AMP
2SC 4808 (Q)
OUT
Q2 AMP
2SC 4619
3C
Q1 LPF
2SC 4738 (GR)
VCO UNIT
Q6 RF AMP
2SC 4083 (N,P)
D9 T/R SW
MA77
Q7 RF AMP
2SC 4093
3T
DA110
D7 T/R SW
MA77
D8 T/R SW
IC3 RF PA
POWER MODULE
RB
TH1
Q17
2SC 4738 (GR)
THERMAL PROTECTOR
APC
SB
D11 ANT SW
RLS 135
D12 BAND SW
1SS 312
D16 NOISE DET
MA 742
Q10 NOISE AMP
2SC 4738 (GR)
BUSY
Q12 HPF
2SC 4738 (GR)
DE-EMPH
2SK 1824
MUTE
VOL
POWER SW
SB
ASB
D17
BAT+
BAT-
D18 V.REF
DA 221
Q14 C. REG
2SK 1483
LOOP FILTER
2SK 1824
2SJ 243
2SK 879 (Y)
IC1 MB1511 PLL
DT
EP
CK
3C
12.8MHZ
DS SW
MA 110
UL
DC-DC CONVERTER
TC7660
3M
TP
Q8 MIXER
2SC 4808 (Q)
2SK 1215 (E)
HVU 355
1SV 270
1SV 270
MCF 45.05MHZ
2SC 4619
3R
IC4 MC3372D FM IF SYSTEM
SM
C1
44.595MHZ
CF1
CD1
ROTARY ENCODER
Q16 CURR.REG
2SK 879 (GR)
APC
MUTE SB BUSY AF SM CI UP 3M DN APC RB EP ASB DT E UL 3R CK 3C TX 3T MOD
D217
TX LED
Q213 V.REG
2SB 766 (RS)
Q214 V.REG
2SB 766 (RS)
Q219 SW
DTA 143 ZE
3RC
Q215 V.DET
UMW1 SW
Q216 V.DET
UMW1 SW
Q217 SW
2SK 1824
3TS
Q218 SW
2SK 1824
SAVE
VDD
IC202 LC7387M-L DTMF ENC/DEC
4.19MHZ
C1
STD ACK SD PD
PTT
PTT SW
IC203 S-81235PG V.REG
IC205 S-80730SN VOLTAGE DET
IC209 TC7S08FU DET
Q220 SW
2SJ 243
LCD
IC202 24C16 EEPROM
Q208 SW
DTA 143 ZE
Q204 SW
DTA 143 ZE
LAMPS
DI
CK
VDD
3MS
INT4
RESET
LAMP
IC206 MPU
LAMP SW MONI SW
CALL DTMF
OSC1
OSC2
2MHZ
KEY MATRIX&BACK LAMP
ET
EP BEEP TO H/L SAVE 3RC 3TS AFCO EL TX MUTE AFC1
DN UP SDO UL BATT
SM REM TEST X1 BUSY
HI
Q205 SW
UMC4
H/L
D202 V.REF
MA 8039
Q202 SW
2SJ 204
Q201 SW
2SK 1824
EL
IC204 LM301AD DC AMP
Q206 C.REG
2SK 879 (Y)
Q207 SW
DTC 114 YE
BEEP/DTMF
TO
75558
MIC AMP
DEV
BEEP
PRE-EMPH
Q209SW
2SK 1824
MUTE
AFC1
AF PA
NJM 2070
2SK 1588
Q221 SW
AE
D218 V.REF
DTZ 3.9B
D220 SW
MA 2S111
Q220 V.DET
2SC 4738
Q210 V.REG
2SB 766 (RS)
ASB
Q212 SW
DTA 144 EE
AFC

Downloaded by
Amateur Radio Directory

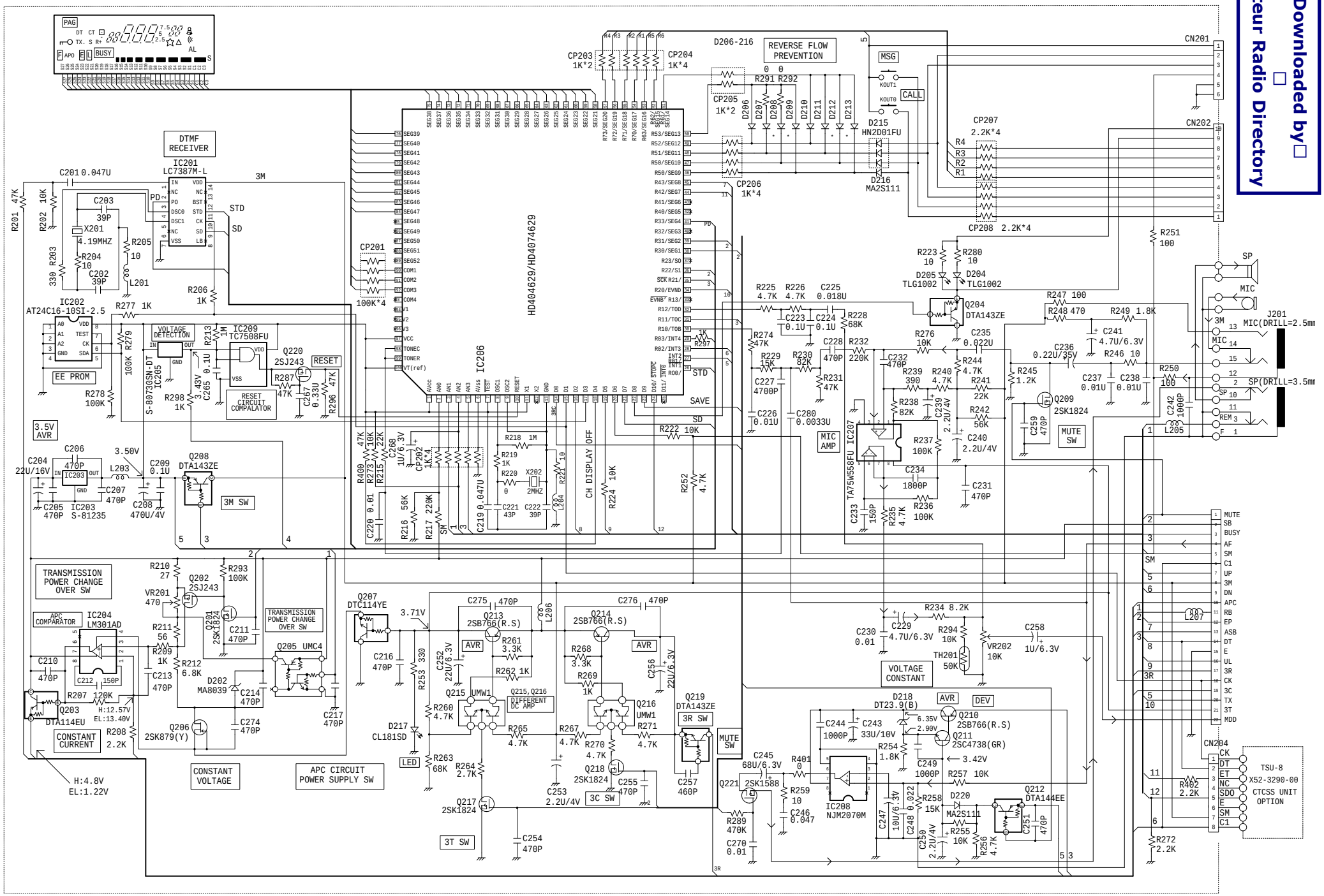
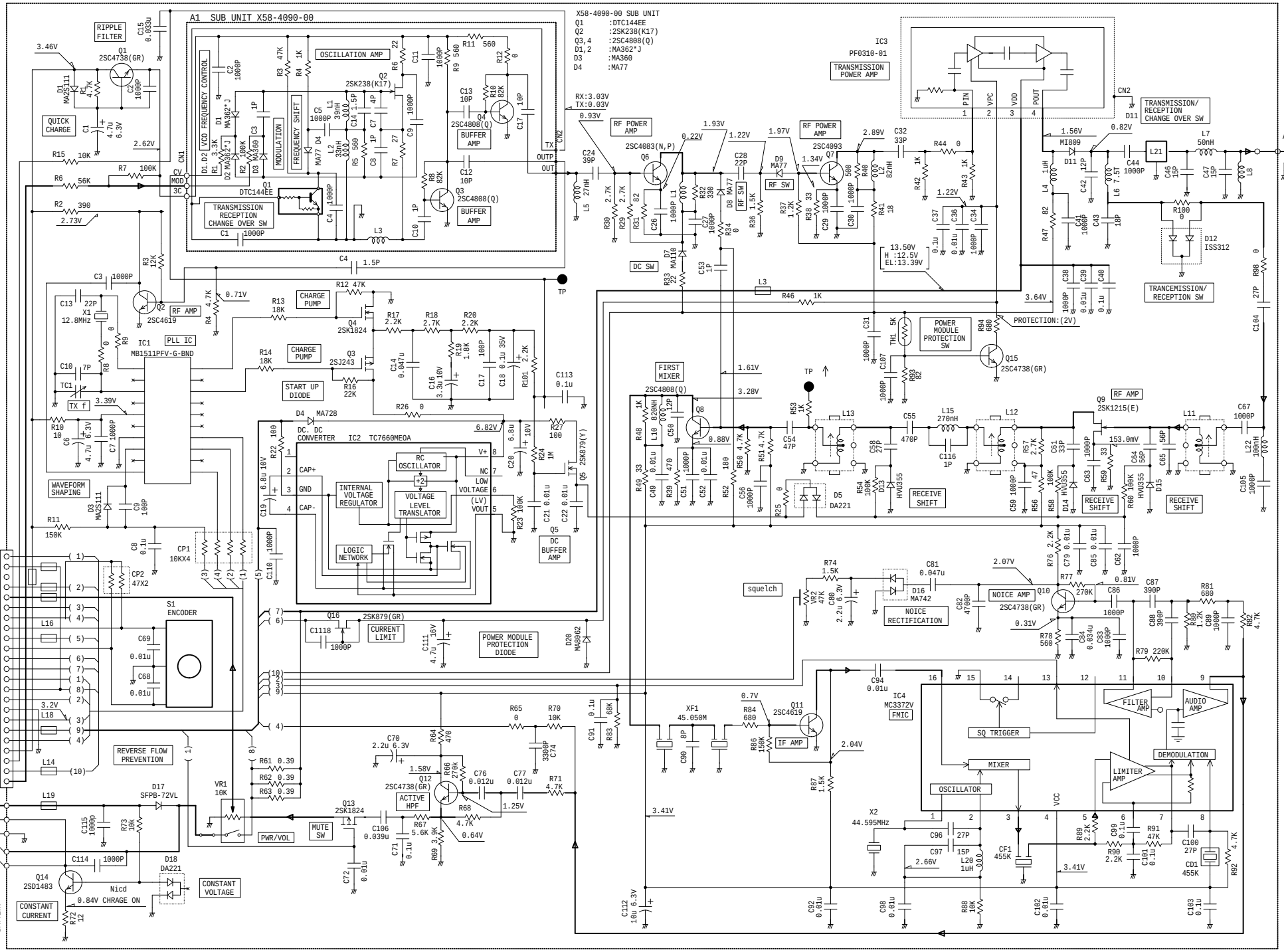
TX-RX UNIT X57-437X-XX(A/4)