ICOM ① IC-756 IC-756M IC-

Downloaded by
Amateur Radio Directory
www.hamdirectory.info

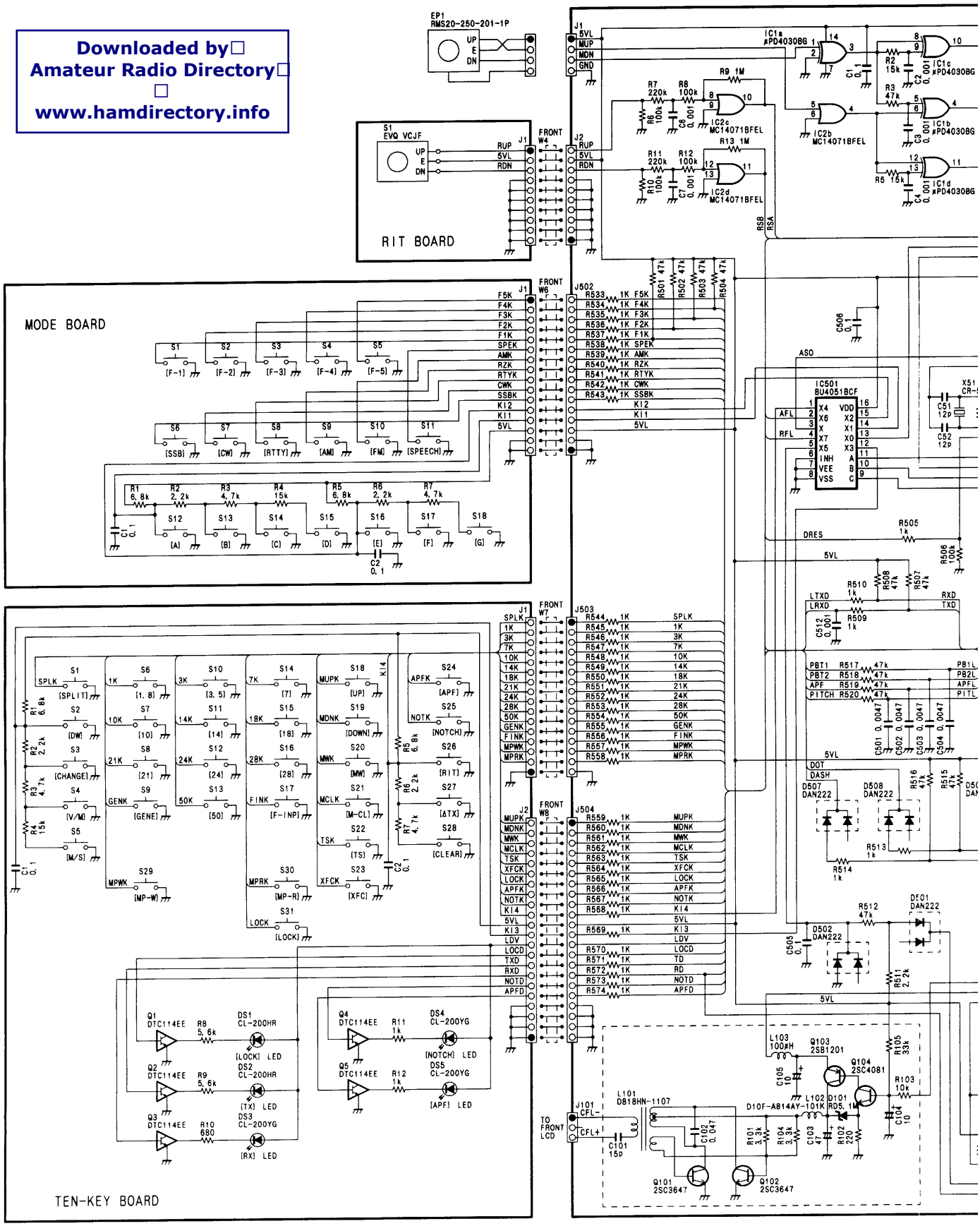

IC-756S

SCHEMATIC DIAGRAM

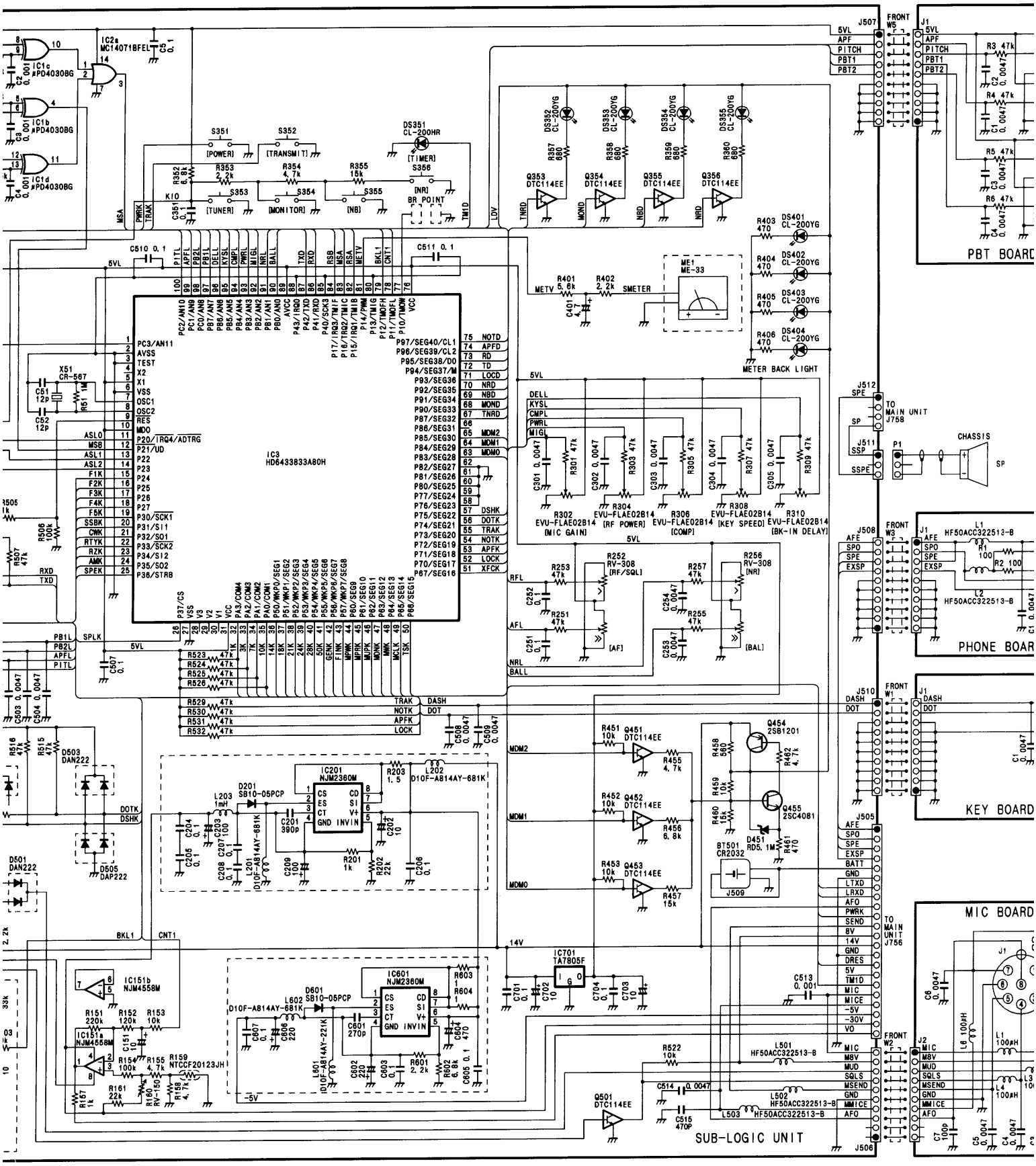

CHEMATIC DIAGRAM

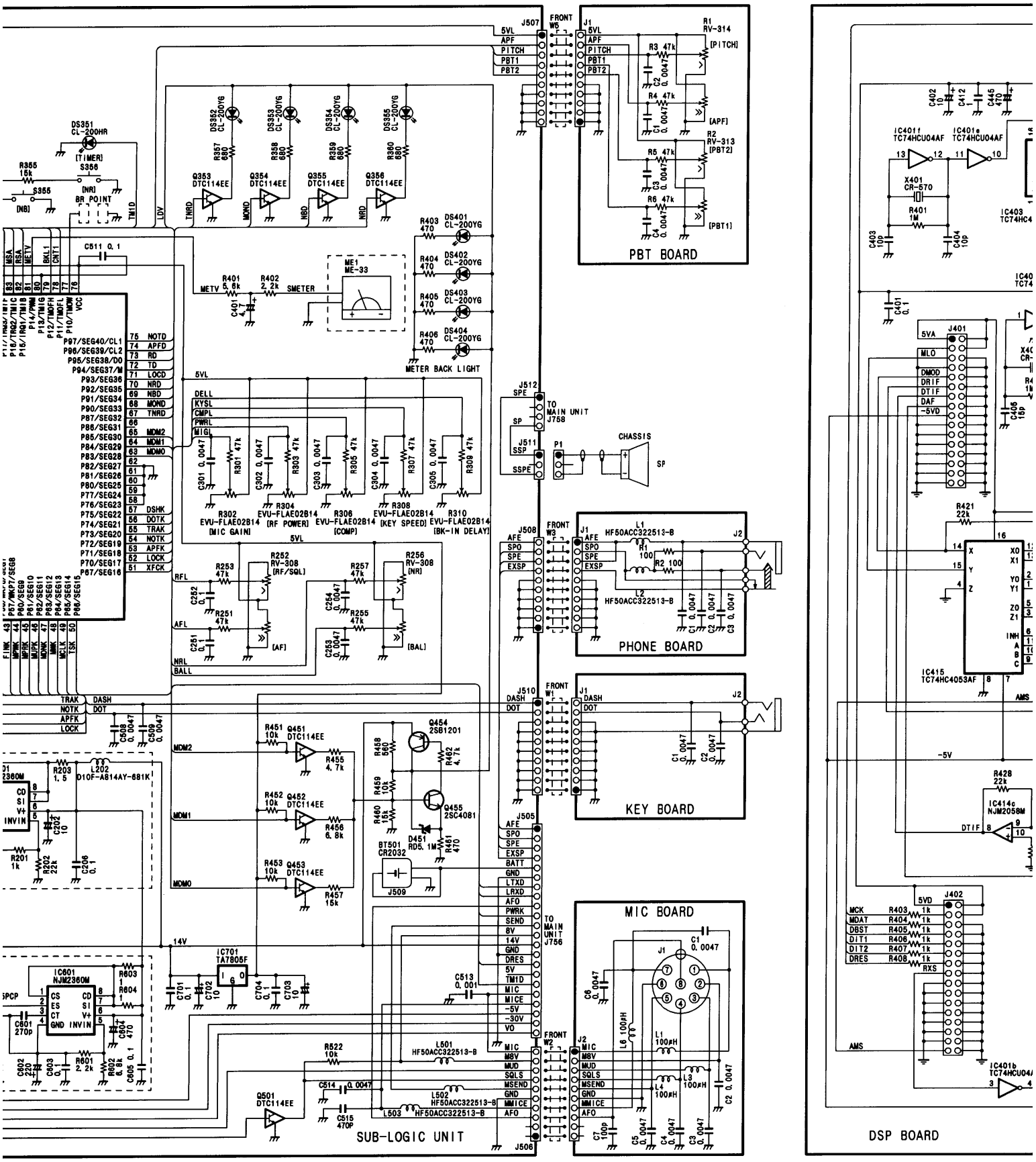

Downloaded by
Amateur Radio Directory
www.hamdirectory.info

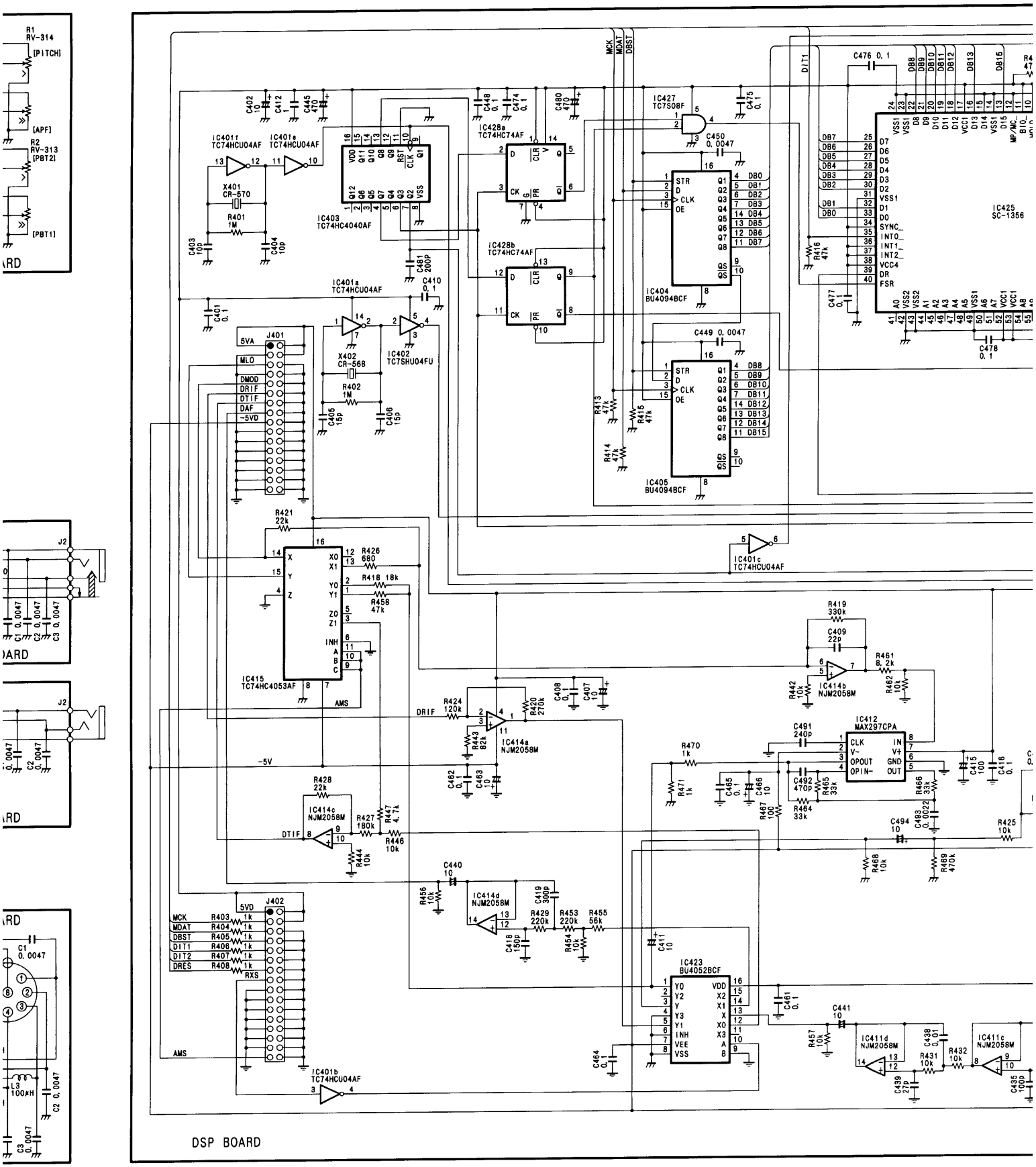

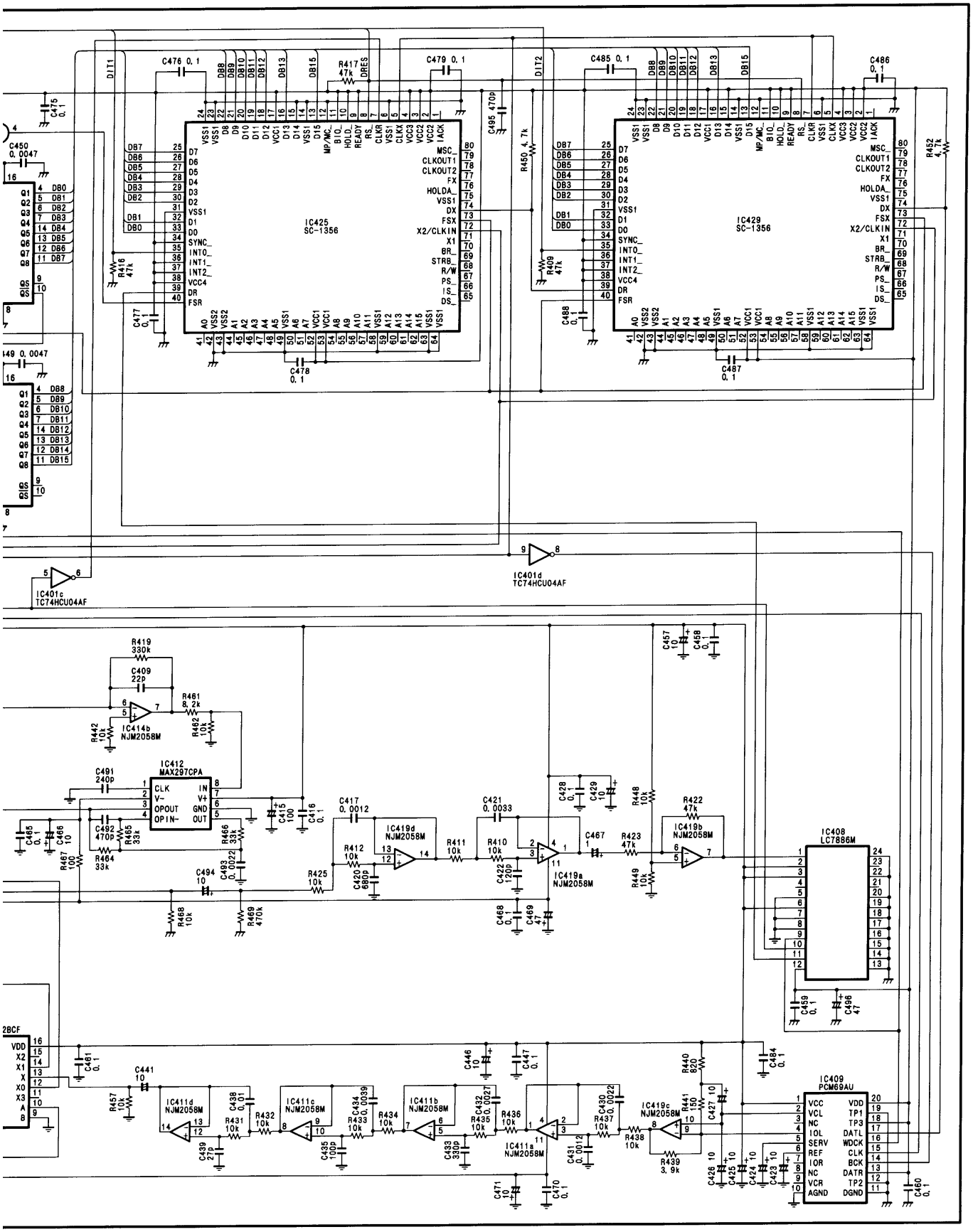
IC425
SC-1356
IC429
SC-1356
IC401c
TC74HCU04AF
IC401d
TC74HCU04AF
IC412
MAX297CPA
IC414b
NJM2058M
IC419d
NJM2058M
IC419a
NJM2058M
IC419b
NJM2058M
IC408
LC7886M
IC411d
NJM2058M
IC411c
NJM2058M
IC411b
NJM2058M
IC411a
NJM2058M
IC419c
NJM2058M
IC409
PCM69AU

ICOM ② IC-756 IC-756M IC-

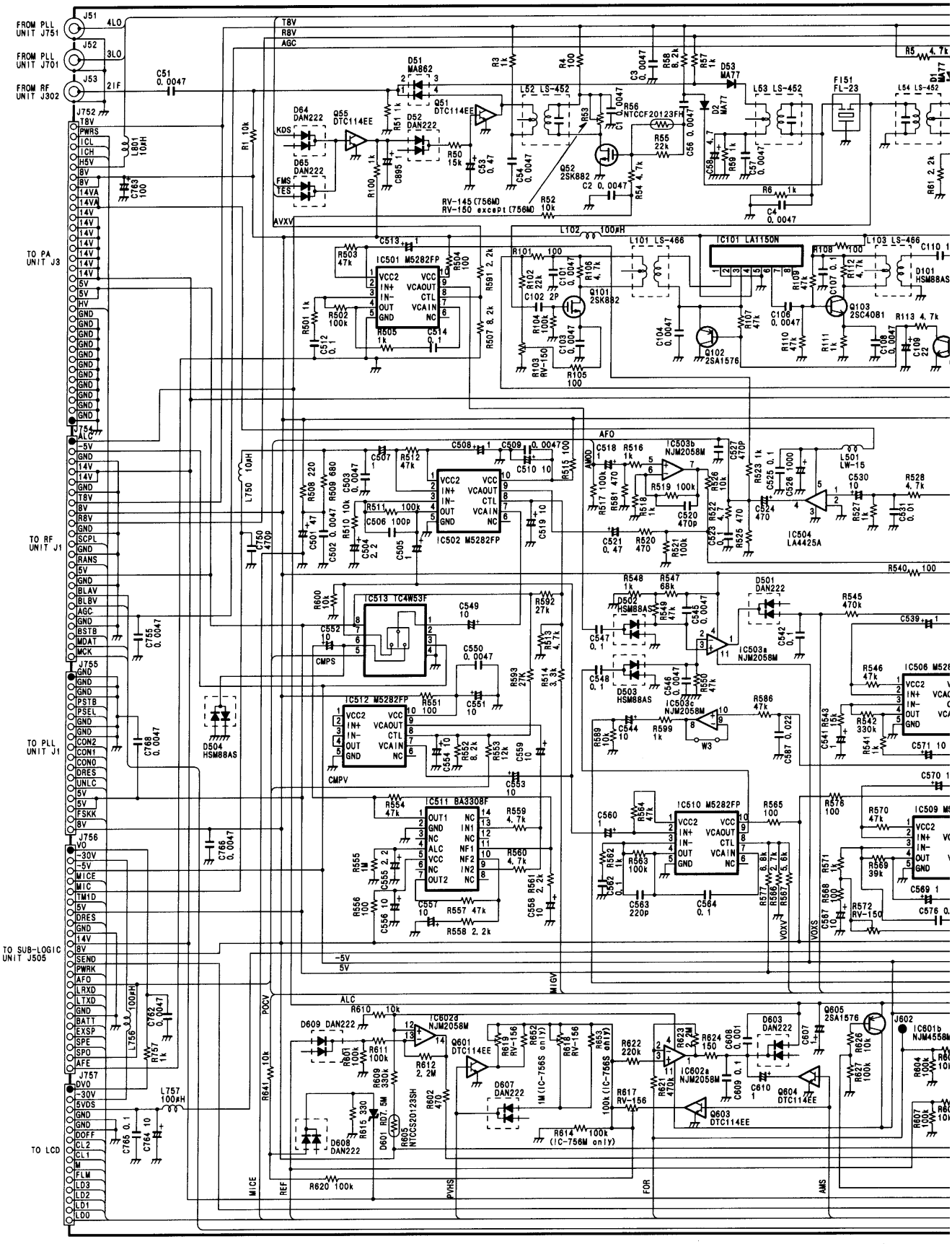

Downloaded by
Amateur Radio Directory
www.hamdirectory.info

IC-756S

SCHEMATIC DIAGRAM

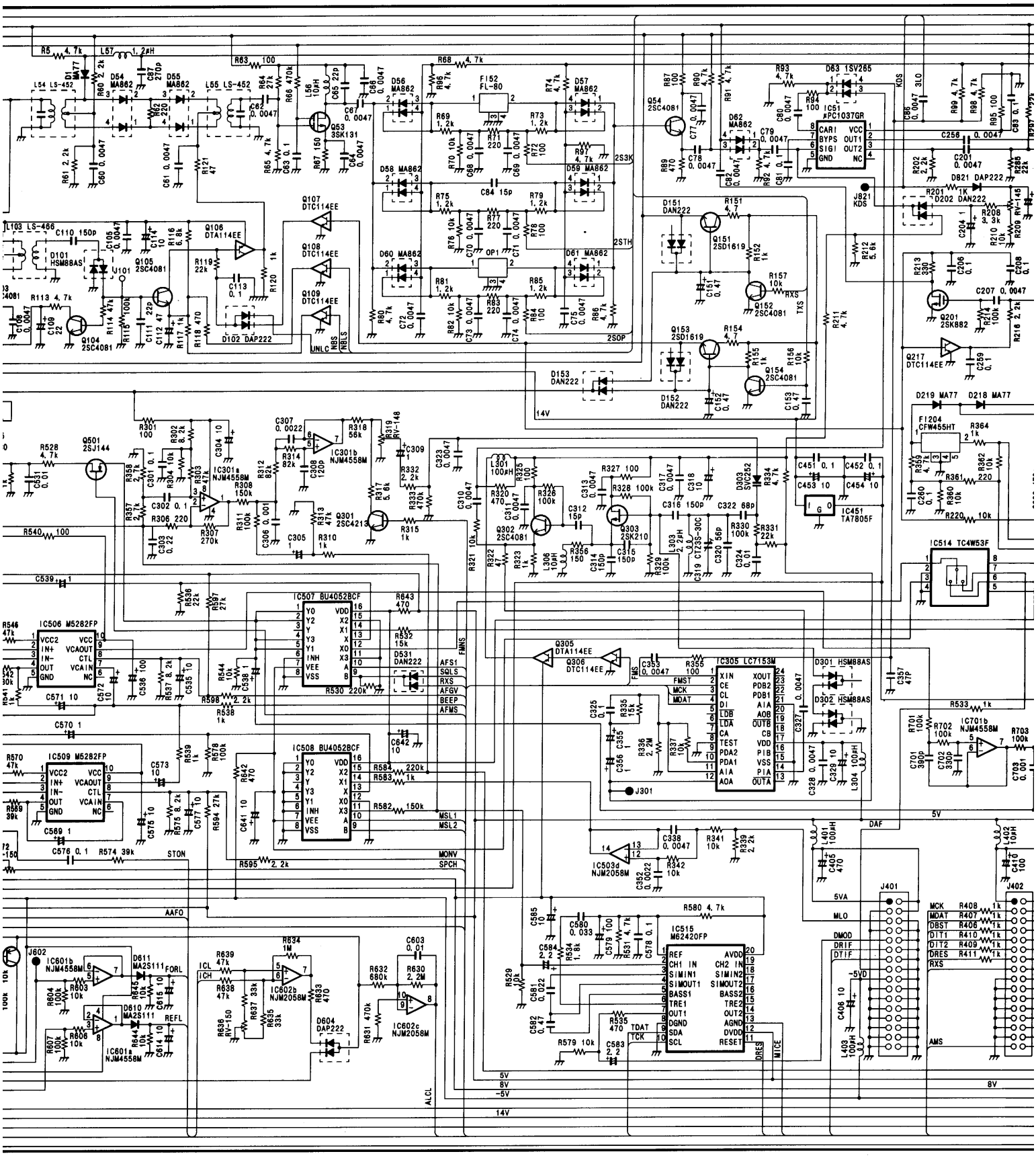

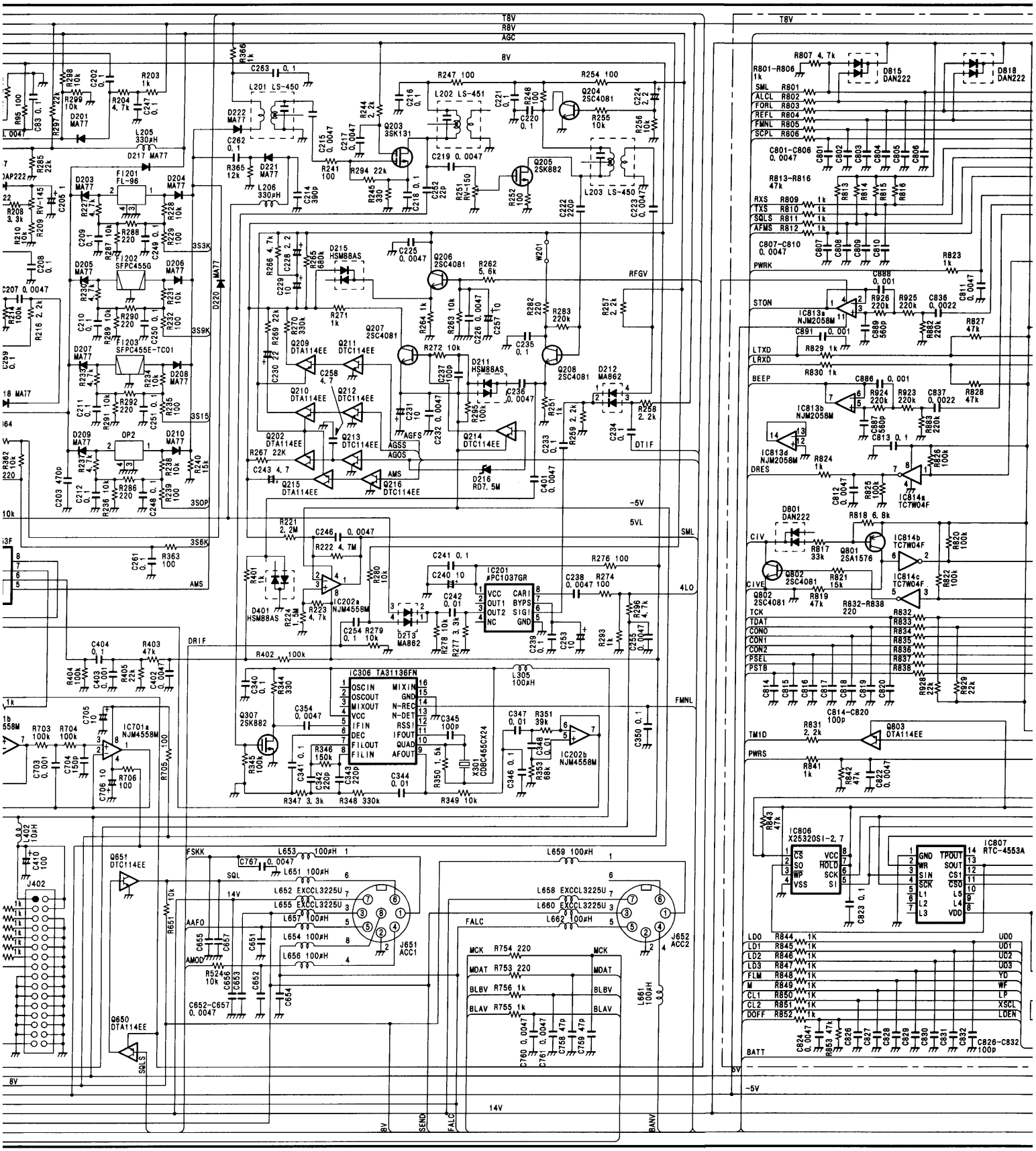
T8V
R8V
AGC
8V
L201 LS-450
L202 LS-451
L203 LS-450
Q203 3SK131
Q204 2SC4081
Q205 2SK882
Q206 2SC4081
Q207 2SC4081
Q208 2SC4081
Q209 DTA114EE
Q210 DTA114EE
Q211 DTC114EE
Q212 DTC114EE
Q213 DTC114EE
Q214 DTC114EE
Q215 DTA114EE
Q216 DTC114EE
Q202 DTA114EE
D215 HSM88AS
D211 HSM88AS
D212 MA862
D216 RD7.5M
D401 HSM88AS
D213 MA862
D222 MA77
D220 MA77
D221 MA77
D217 MA77
D203 MA77
D204 MA77
D205 MA77
D206 MA77
D207 MA77
D208 MA77
D209 MA77
D210 MA77
F1201 FL-96
F1202 SFPC455G
F1203 SFPC455E-TC01
OP2
3S3K
3S9K
3S15
3SOP
3S6K
RFGV
-5V
5VL
SML
AMS
DRIF
4LO
FMNL
DTIF
AGFS
AGSS
AGOS
IC201 μPC1037GR
VCC
OUT1
OUT2
NC
CAR1
BYPS
SIG1
GND
IC202a NJM4558M
IC202b NJM4558M
IC301 CDBC455CX24
IC306 TA31136FN
OSCIN
OSCOUT
MIXOUT
VCC
IFIN
DEC
FILOUT
FILIN
MIXIN
GND
N-REC
N-DET
RSS1
IFOUT
QUAD
AFOUT
IC701a NJM4558M
Q307 2SK882
L305 100μH
FSKK
SQL
14V
AAFO
AMOD
J651 ACC1
J652 ACC2
Q651 DTC114EE
Q650 DTA114EE
SQLS
MCK
MDAT
BLBV
BLAV
FALC
SEND
BANV
T8V
R801-R806 1k
D815 DAN222
D818 DAN222
SML
ALCL
FORL
REFL
FMNL
SCPL
C801-C806 0.0047
R813-R816 47k
RXS
TXS
SQLS
AFMS
C807-C810 0.0047
PWRK
STON
IC813a NJM2058M
LTXD
LRXD
BEEP
IC813b NJM2058M
IC813d NJM2058M
DRES
IC814a TC7W04F
D801 DAN222
CIV
IC814b TC7W04F
Q801 2SA1576
Q802 2SC4081
CIVE
IC814c TC7W04F
TCK
TDAT
CONO
CON1
CON2
PSEL
PSTB
C814-C820 100p
TM1D
Q803 DTA114EE
PWRS
IC806 X25320SI-2.7
CS
SO
WP
VSS
VCC
HOLD
SCK
SI
IC807 RTC-4553A
GND
WR
SIN
SCK
L1
L2
L3
TPOUT
SOUT
CS1
CS0
L5
L4
VDD
LD0
LD1
LD2
LD3
FLM
M
CL1
CL2
DOFF
UD0
UD1
UD2
UD3
YD
WF
LP
XSCL
LDEN
BATT
C826-C832 100p
5V
-5V
14V

Downloaded by
Amateur Radio Directory
www.hamdirectory.info

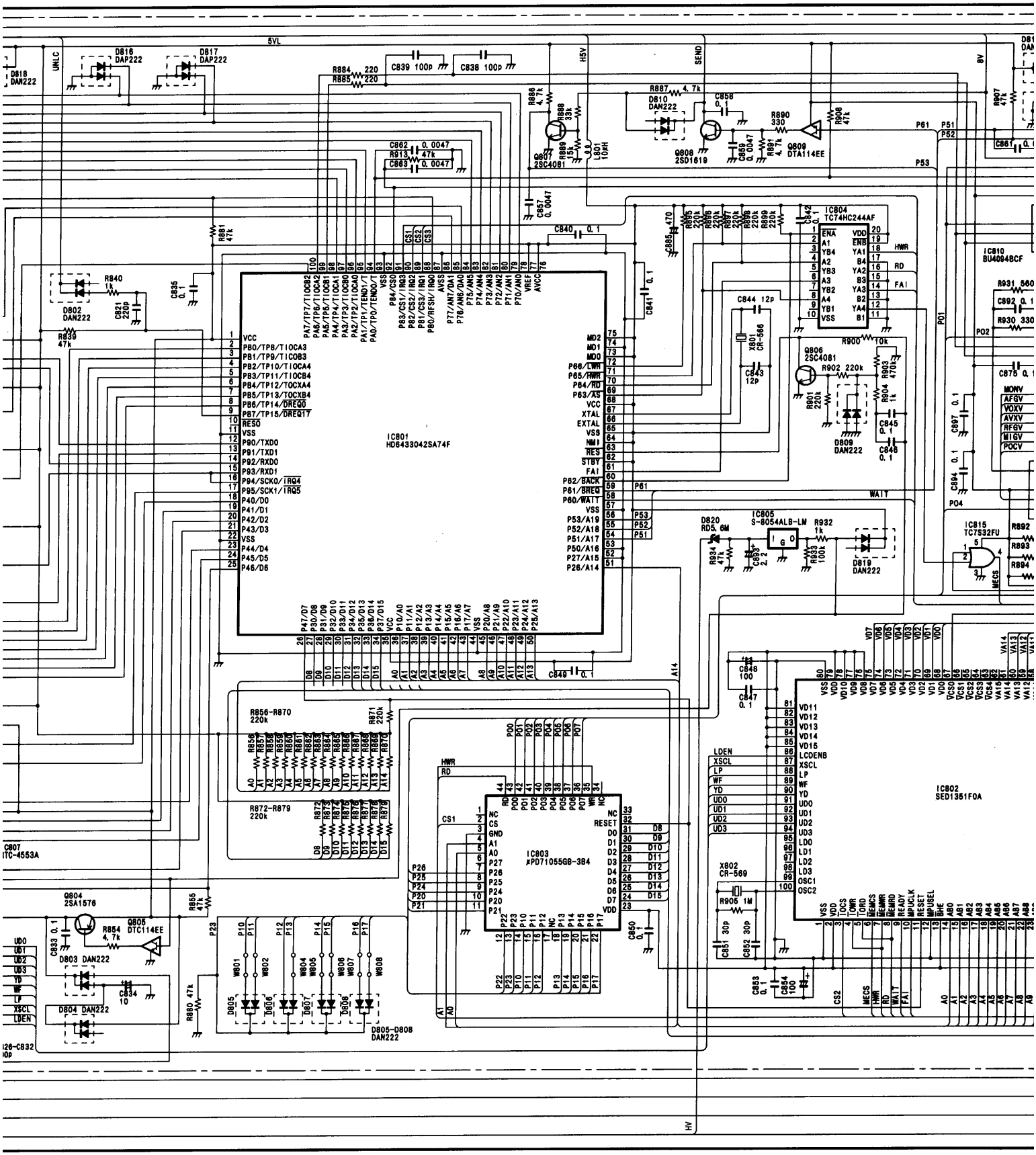

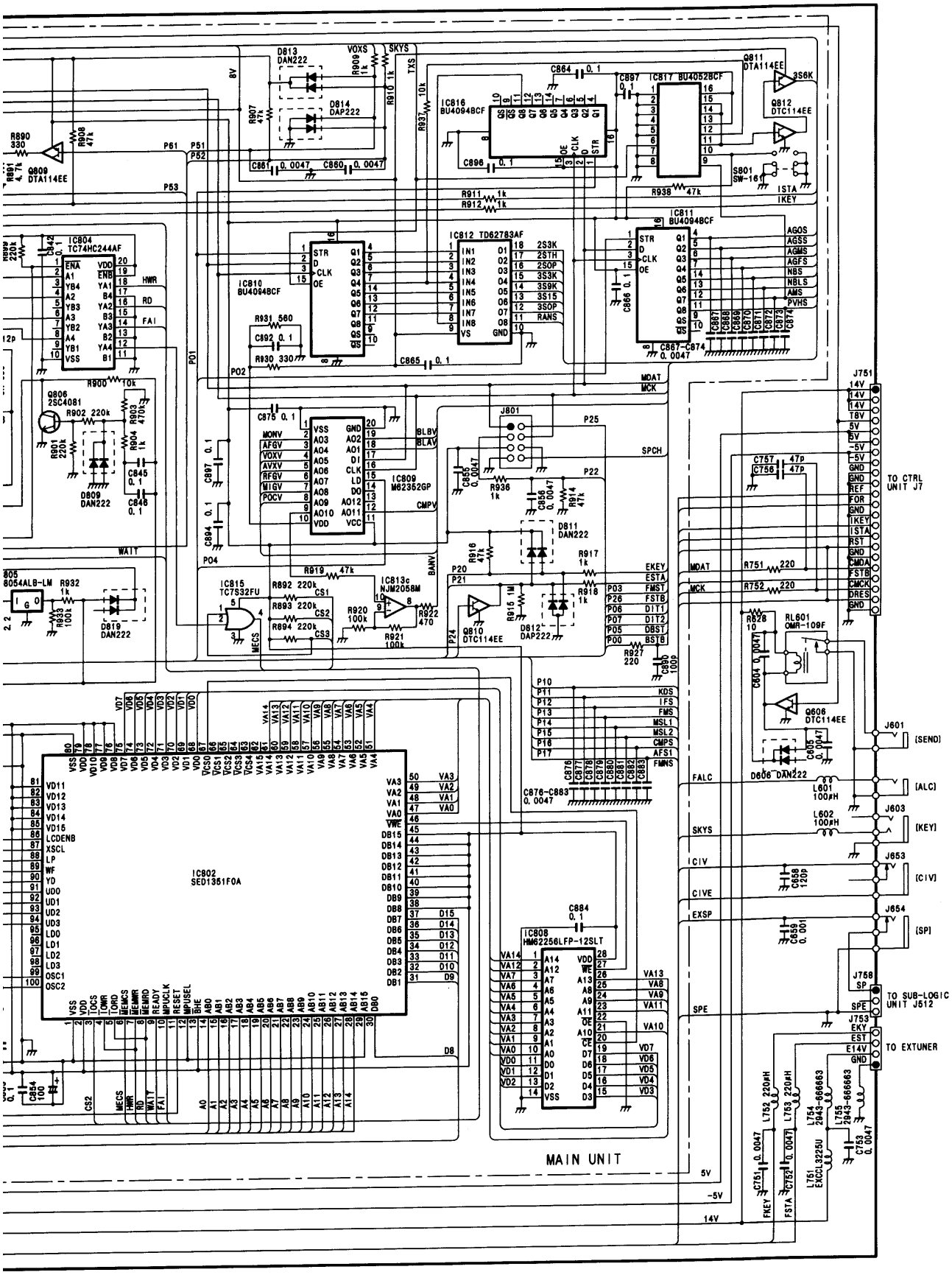
IC802
SED1351F0A
IC804
TC74HC244AF
IC810
BU4094BCF
IC812
TD62783AF
IC816
BU4094BCF
IC817
BU4052BCF
IC811
BU4094BCF
IC809
M62352GP
IC815
TC7S32FU
IC813c
NJM2058M
IC808
HM62256LFP-12SLT
Q806
2SC4081
Q809
DTA114EE
Q811
DTA114EE
Q812
DTC114EE
Q810
DTC114EE
Q606
DTC114EE
RL601
OMR-109F
J751
TO CTRL UNIT J7
J601
[SEND]
J602
[ALC]
J603
[KEY]
J653
[CIV]
J654
[SP]
J758
TO SUB-LOGIC UNIT J512
J753
TO EXTUNER
MAIN UNIT

ICOM ③ IC-756 IC-756M IC-

Downloaded by
Amateur Radio Directory
www.hamdirectory.info

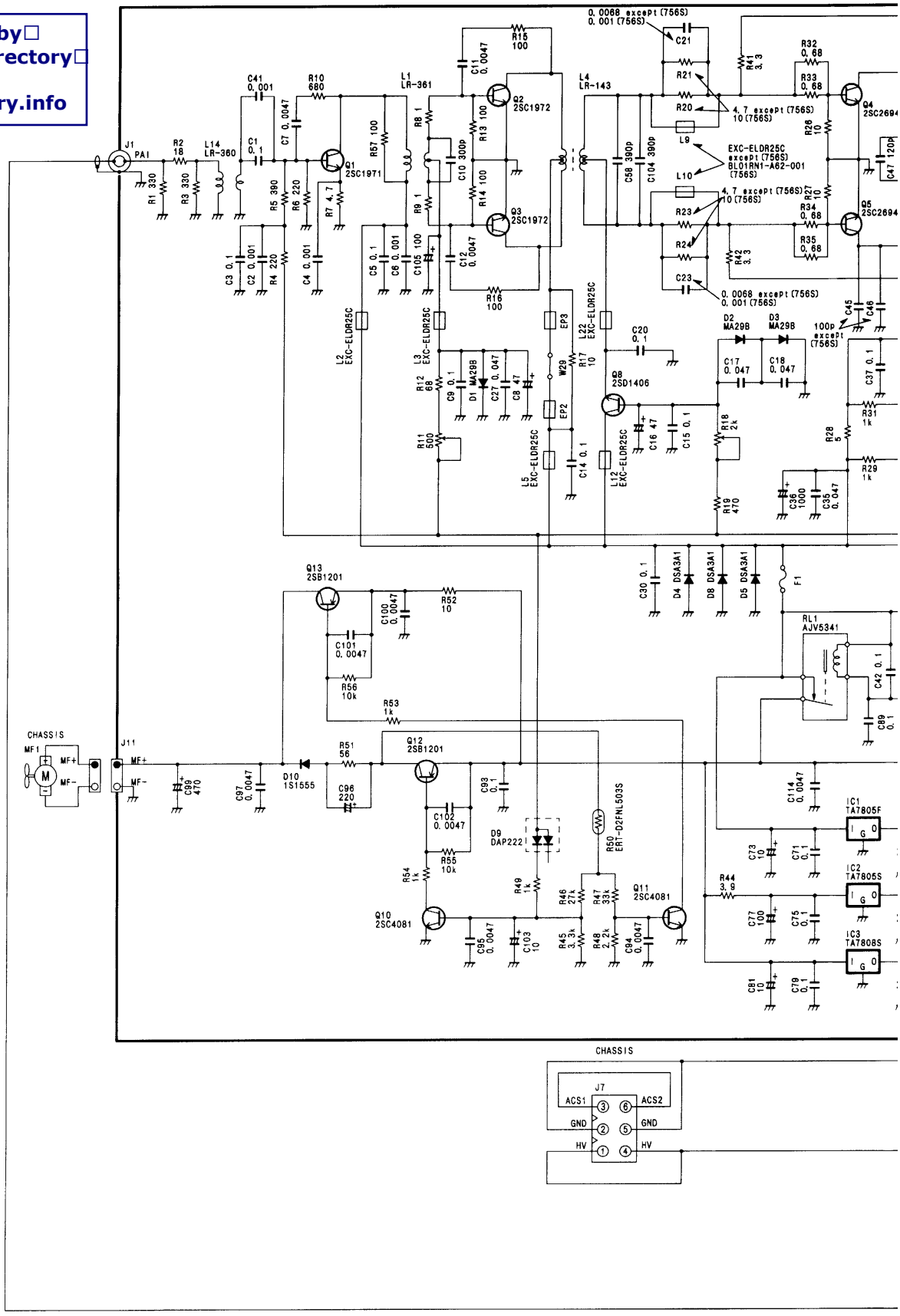

IC-756S

SCHEMATIC DIAGRAM

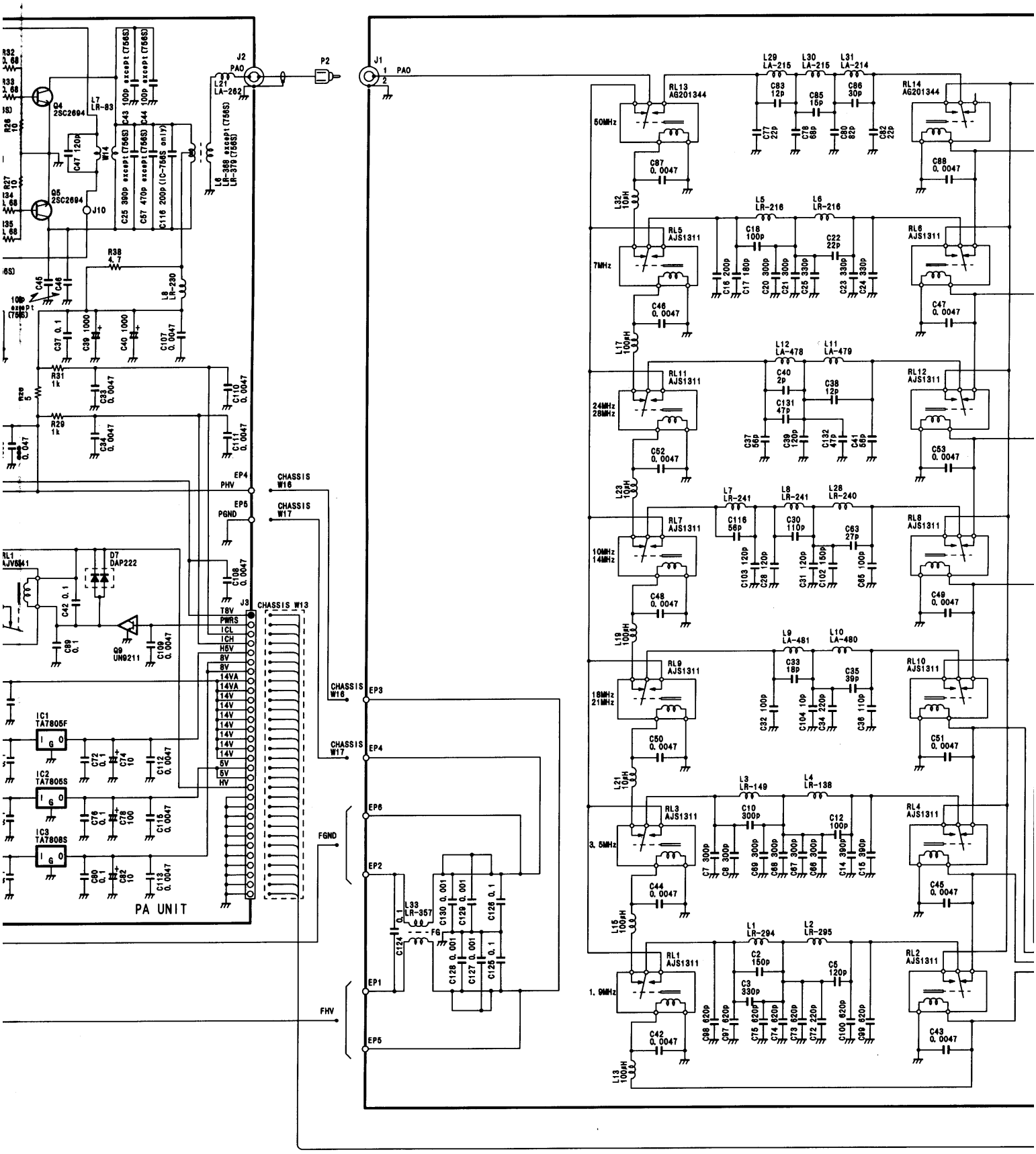

Downloaded by
Amateur Radio Directory
www.hamdirectory.info

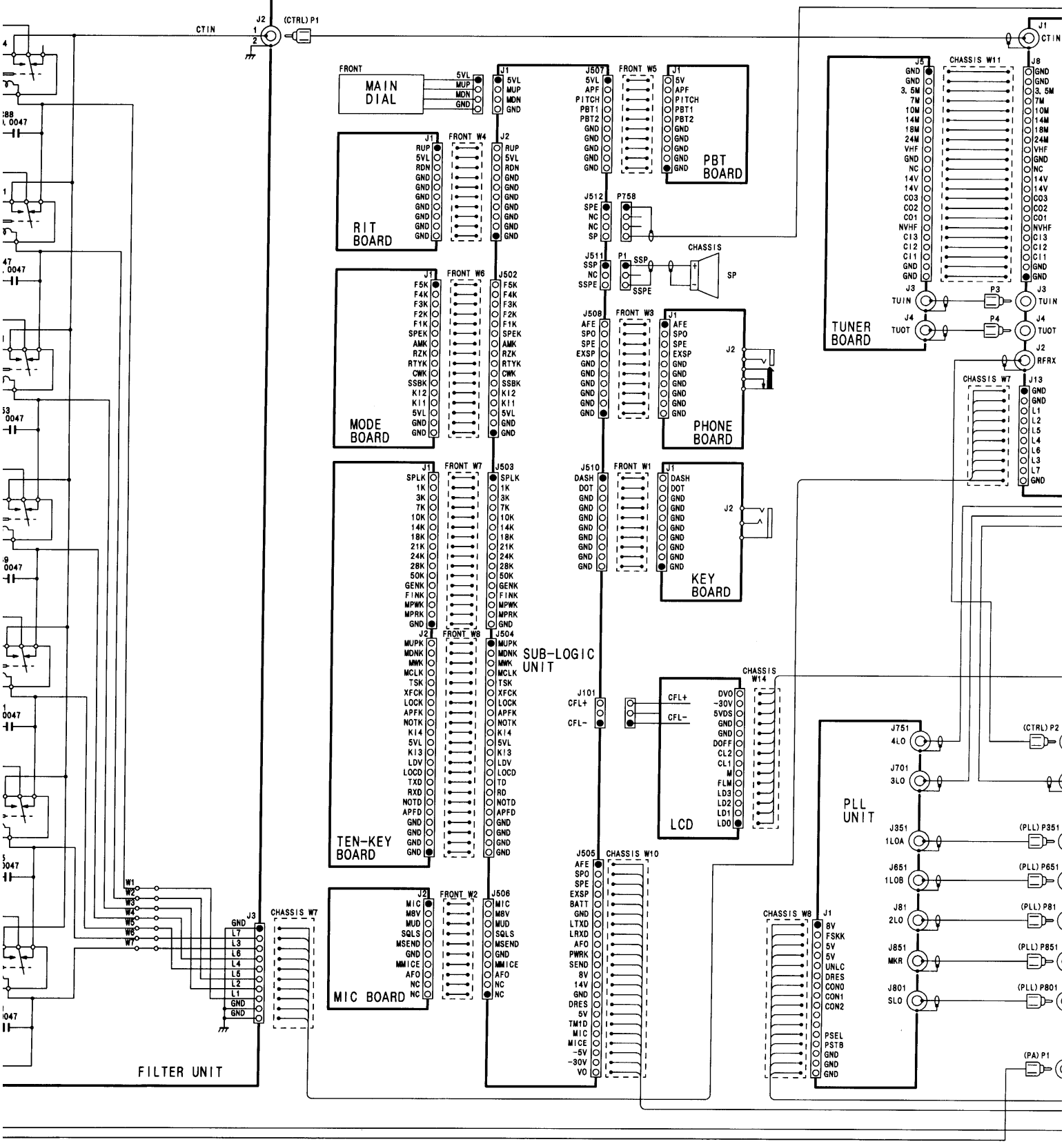

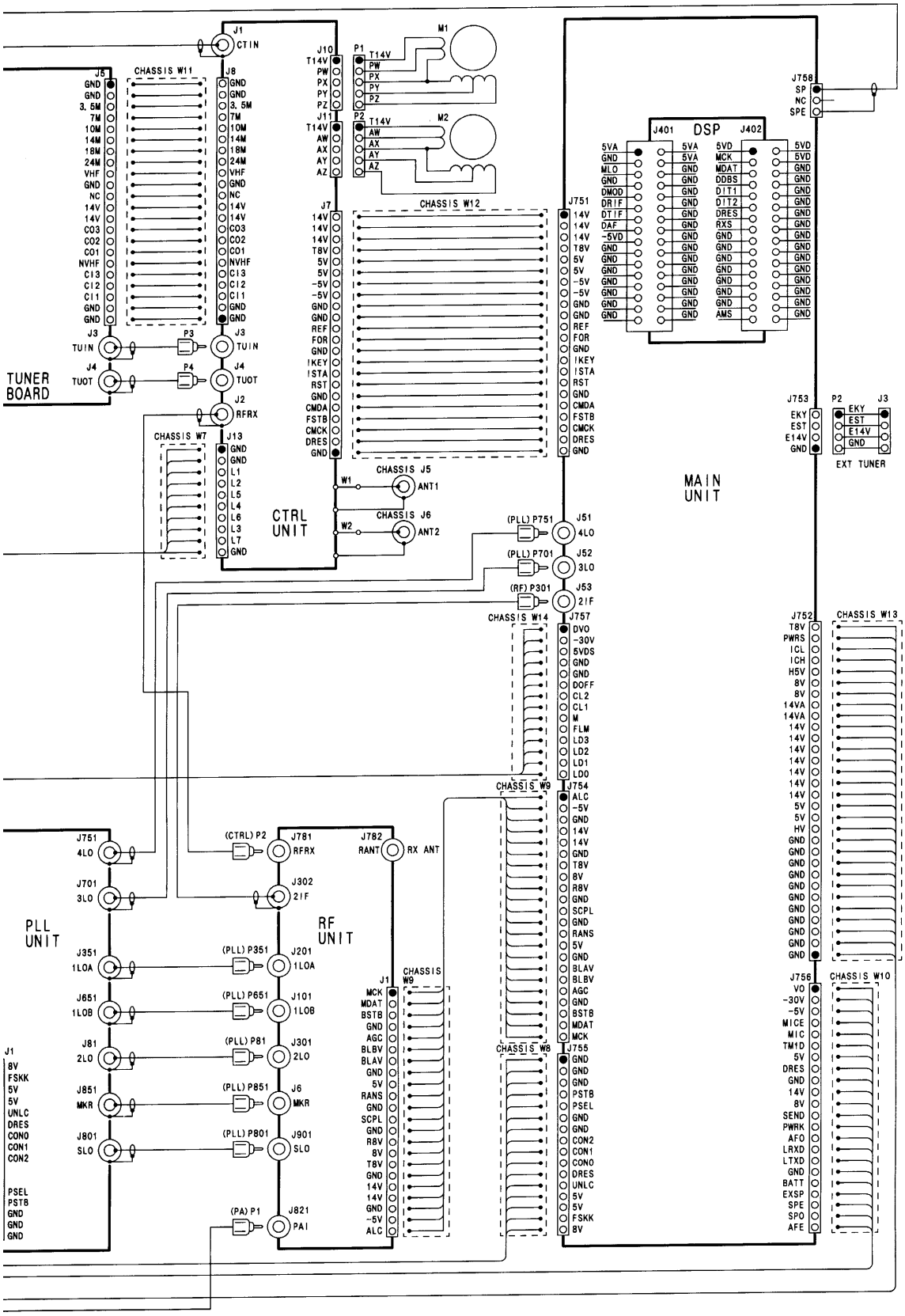
TUNER BOARD
CTRL UNIT
MAIN UNIT
PLL UNIT
RF UNIT
DSP
EXT TUNER
CHASSIS W7
CHASSIS W8
CHASSIS W9
CHASSIS W10
CHASSIS W11
CHASSIS W12
CHASSIS W13
CHASSIS W14
CHASSIS J5
CHASSIS J6
J1 CTIN
J10 T14V PW PX PY PZ
J11 T14V AW AX AY AZ
P1 T14V PW PX PY PZ
P2 T14V AW AX AY AZ
M1
M2
J7 14V 14V 14V T8V 5V 5V -5V -5V GND GND REF FOR GND IKEY ISTA RST GND CMDA FSTB CMCK DRES GND
J5 GND GND 3.5M 7M 10M 14M 18M 24M VHF GND NC 14V 14V CO3 CO2 CO1 NVHF CI3 CI2 CI1 GND GND
J8 GND GND 3.5M 7M 10M 14M 18M 24M VHF GND NC 14V 14V CO3 CO2 CO1 NVHF CI3 CI2 CI1 GND GND
J3 TUIN
J4 TUOT
P3
P4
J3 TUIN
J4 TUOT
J2 RFRX
J13 GND GND L1 L2 L5 L4 L6 L3 L7 GND
W1
W2
ANT1
ANT2
J751 14V 14V 14V T8V 5V 5V -5V -5V GND GND REF FOR GND IKEY ISTA RST GND CMDA FSTB CMCK DRES GND
J401 DSP J402
5VA GND MLO GND DMOD DRIF DTIF DAF -5VD GND GND GND GND GND GND GND GND
5VA 5VA GND GND GND GND GND GND GND GND GND GND GND GND GND GND
5VD MCK MDAT DDBS DIT1 DIT2 DRES RXS GND GND GND GND GND GND GND GND
5VD 5VD GND GND GND GND GND GND GND GND GND GND GND GND GND GND
J758 SP NC SPE
J753 EKY EST E14V GND
P2 EKY EST E14V GND
J3
(PLL) P751
(PLL) P701
(RF) P301
J51 4LO
J52 3LO
J53 2IF
J757 DVO -30V 5VDS GND GND DOFF CL2 CL1 M FLM LD3 LD2 LD1 LD0
J754 ALC -5V GND 14V 14V GND T8V 8V R8V GND SCPL GND RANS 5V GND BLAV BLBV AGC GND BSTB MDAT MCK
J755 GND GND GND PSTB PSEL GND GND CON2 CON1 CON0 DRES UNLC 5V 5V FSKK 8V
J752 T8V PWRS ICL ICH H5V 8V 8V 14VA 14VA 14V 14V 14V 14V 14V 14V 14V 5V 5V HV GND GND GND GND GND GND GND GND GND GND GND
J756 VO -30V -5V MICE MIC TM1D 5V DRES GND 14V 8V SEND PWRK AFO LRXD LTXD GND BATT EXSP SPE SPO AFE
J751 4LO
J701 3LO
J351 1LOA
J651 1LOB
J81 2LO
J851 MKR
J801 SLO
J1 8V FSKK 5V 5V UNLC DRES CON0 CON1 CON2 PSEL PSTB GND GND GND
(CTRL) P2
(PLL) P351
(PLL) P651
(PLL) P81
(PLL) P851
(PLL) P801
(PA) P1
J781 RFRX
J302 2IF
J201 1LOA
J101 1LOB
J301 2LO
J6 MKR
J901 SLO
J821 PAI
J782 RANT
RX ANT
J1 MCK MDAT BSTB GND AGC BLBV BLAV GND 5V RANS GND SCPL GND R8V 8V T8V GND 14V 14V GND -5V ALC

Downloaded by
Amateur Radio Directory
www.hamdirectory.info

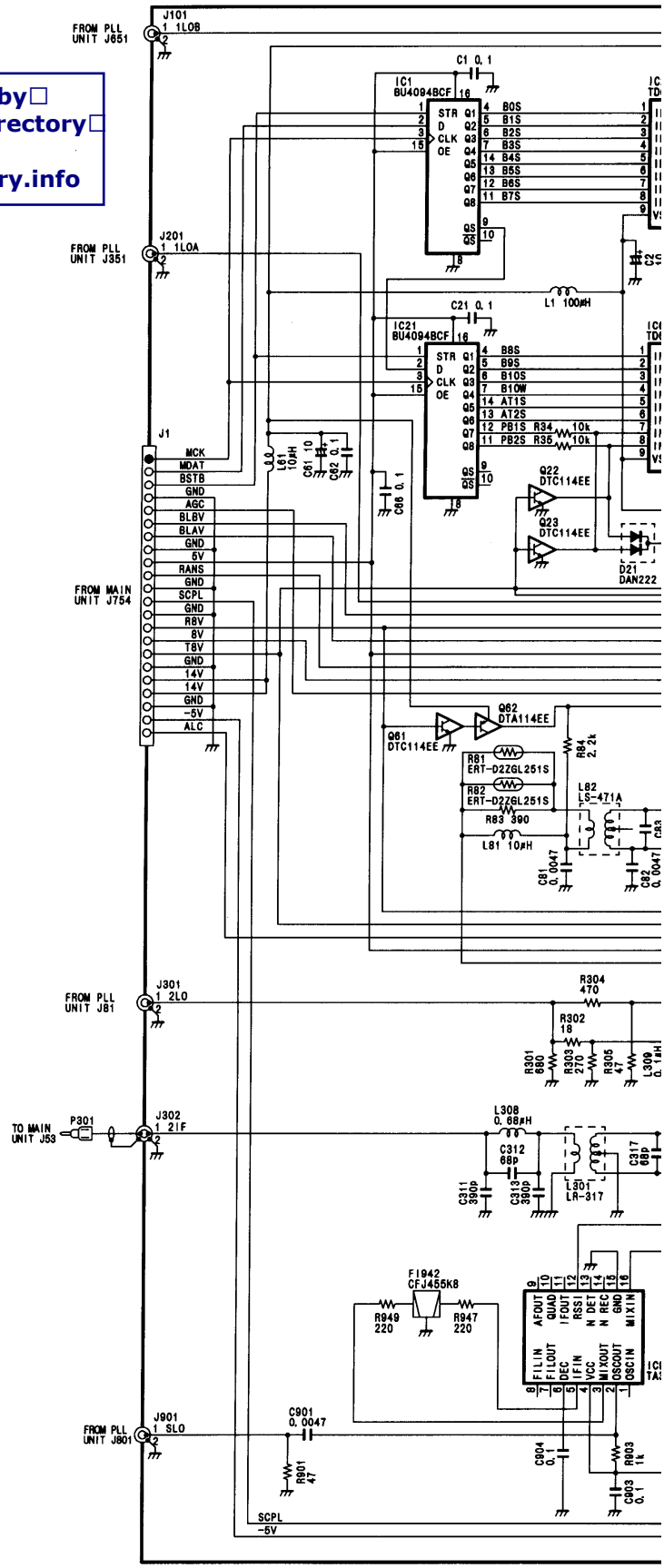

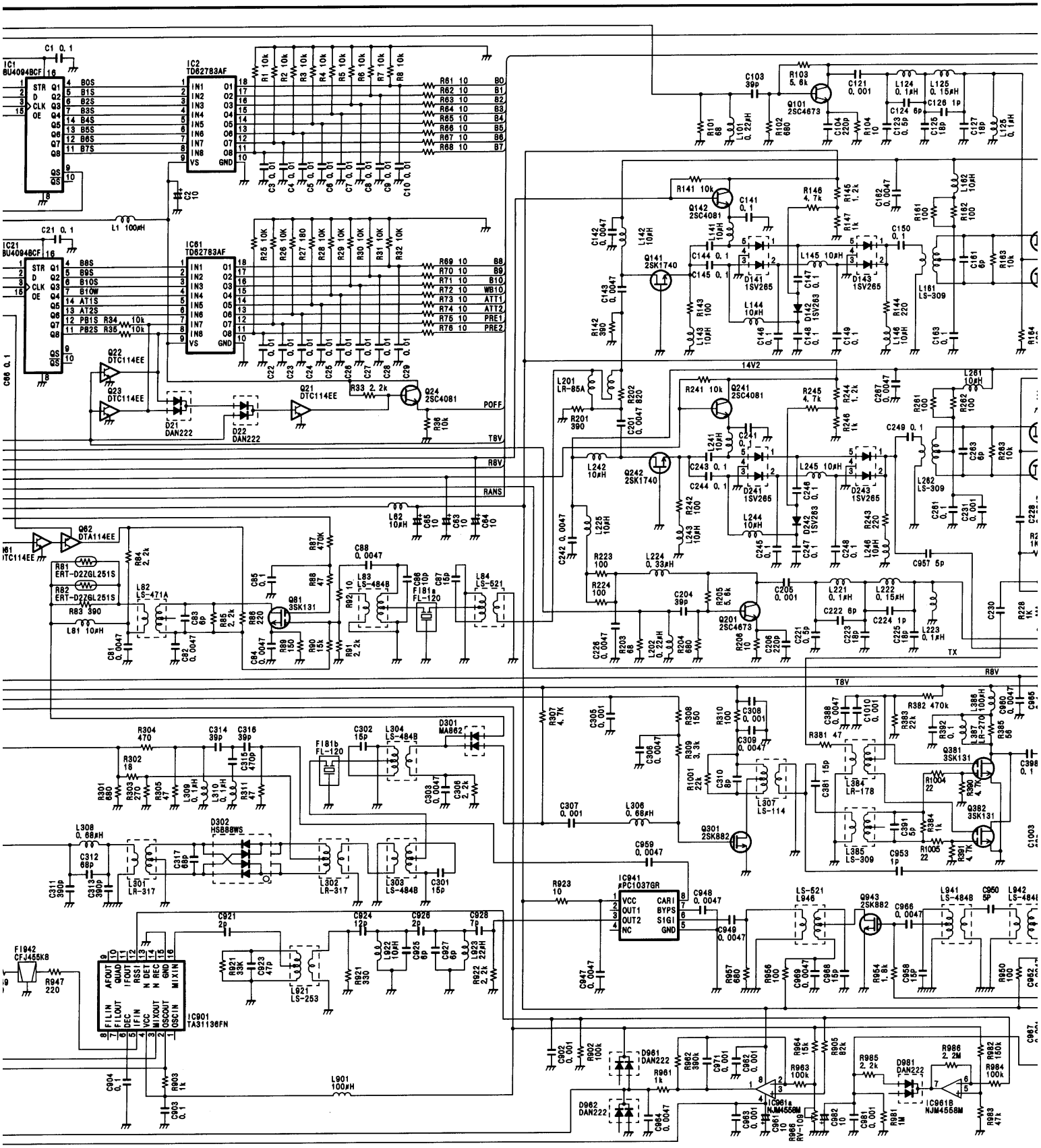
IC1 BU4094BCF
IC2 TD62783AF
IC21 BU4094BCF
IC61 TD62783AF
IC901 TA31136FN
IC941 μPC1037GR
IC961a NJM4558M
IC961b NJM4558M
Q101 2SC4673
Q141 2SK1740
Q142 2SC4081
Q201 2SC4673
Q241 2SC4081
Q242 2SK1740
Q301 2SK882
Q381 3SK131
Q382 3SK131
Q81 3SK131
Q943 2SK882
Q21 DTC114EE
Q22 DTC114EE
Q23 DTC114EE
Q24 2SC4081
Q61 DTA114EE
D21 DAN222
D22 DAN222
D141 1SV265
D143 1SV265
D241 1SV265
D243 1SV265
D142 1SV263
D242 1SV263
D301 MA862
D302 HSB88WS
D961 DAN222
D962 DAN222
D981 DAN222
F181a FL-120
F181b FL-120
F1942 CFJ455K8
L101 0.22μH
L125 0.15μH
L161 LS-309
L201 LR-85A
L262 LS-309
L301 LR-317
L302 LR-317
L303 LS-484B
L304 LS-484B
L307 LS-114
L384 LR-178
L385 LS-309
L387 LR-270
L901 100μH
L941 LS-484B
L946 LS-521
LS-521 L946
R141 10k
R146 4.7k
R103 5.6k
R241 10k
R245 4.7k
R307 4.7k
R923 10
R947 220
R961 1k
R903 1k
R986 2.2M
R985 2.2k
R984 100k
R983 47k
R981 1M
R982 100k
R902 100k
R964 15k
R963 100k
R905 82k
R957 680
R956 100
R954 1.8k
R958 15p
R950 100
R952 100
R948 0.0047
R949 0.0047
R947 0.0047
R959 0.0047
R307 4.7k
R308 150
R309 3.3k
R310 100
R1001 22k
R1004 22
R1005 22
R390 4.7k
R391 4.7k
R382 470k
R383 22k
R392 0.1
R384 1k
R381 47
R304 470
R302 18
R301 680
R303 270
R305 47
R309 0.1μH
R310 0.1μH
R311 47
R314 39p
R316 39p
R315 470p
R312 68p
R313 390p
R317 68p
R308 150
R923 10
R921 33K
R921 330
R922 2.2k
R923 10
R947 220
R903 1k
R904 0.1
R901 100μH
R961 1k
R962 390k
R963 100k
R964 15k
R905 82k
R985 2.2k
R986 2.2M
R984 100k
R983 47k
R981 1M
R982 100k
R902 100k

Downloaded by
Amateur Radio Directory
www.hamdirectory.info

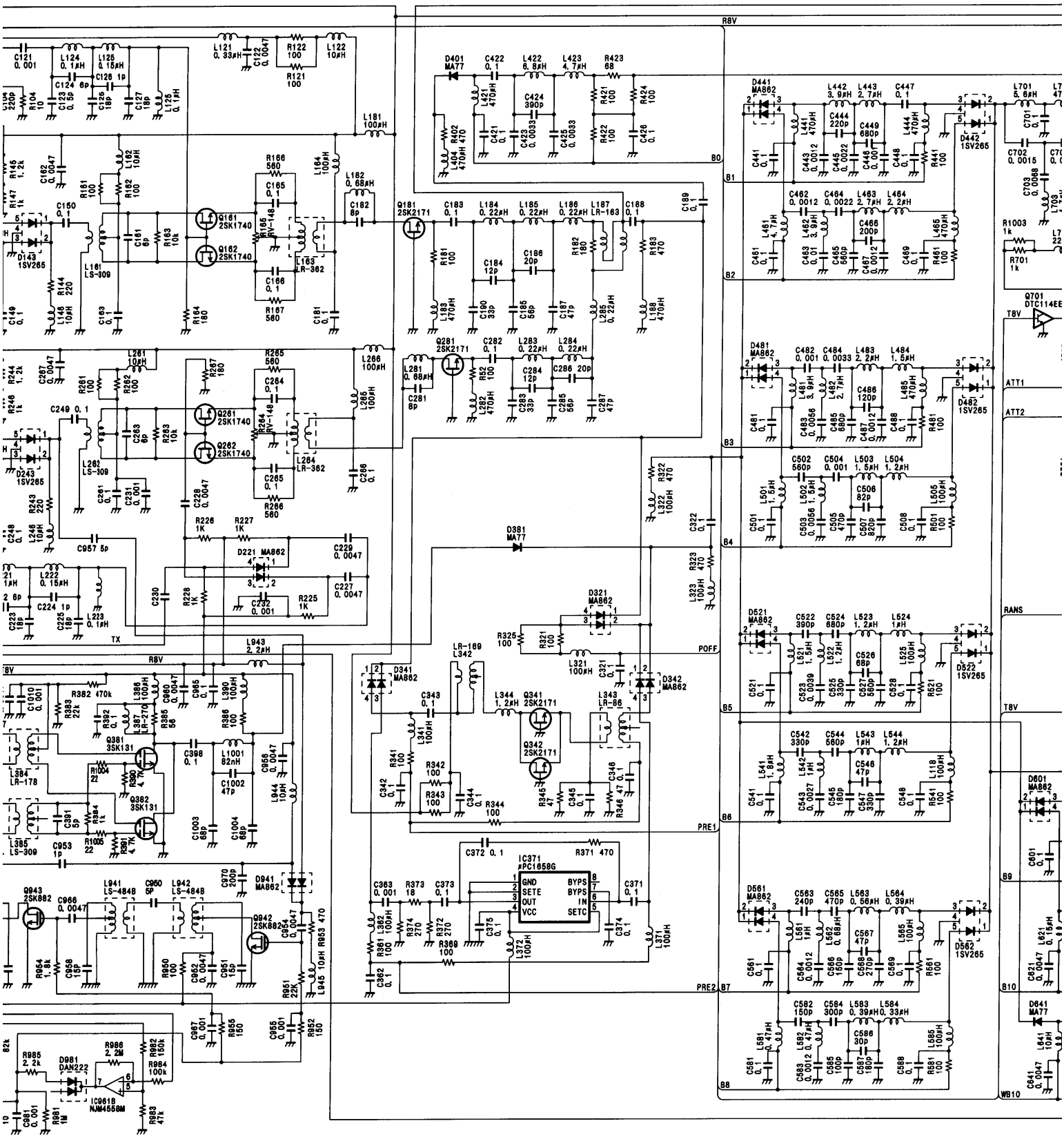

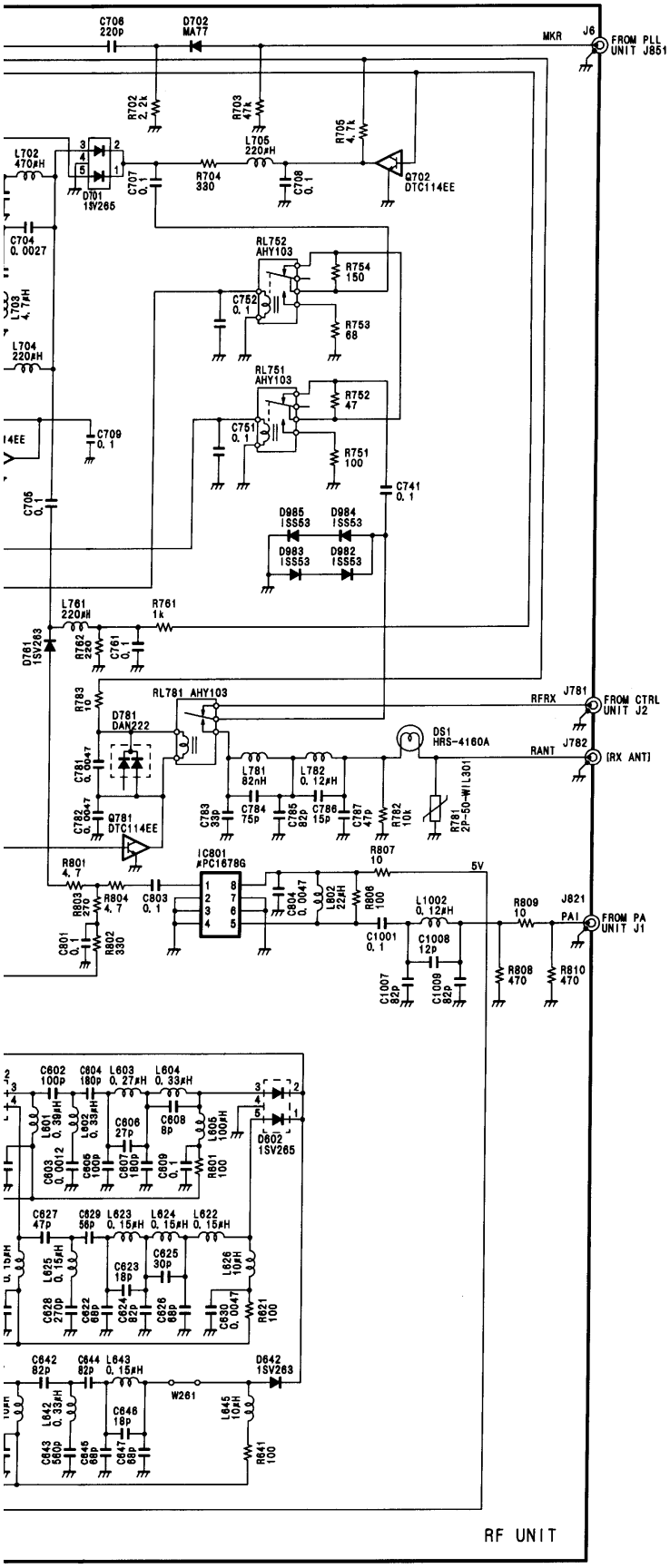
C706 220p
D702 MA77
MKR
J6
FROM PLL UNIT J851
R702 2.2k
R703 47k
R705 4.7k
L702 470μH
D701 1SV265
C707 0.1
R704 330
L705 220μH
C708 0.1
Q702 DTC114EE
C704 0.0027
L703 4.7μH
L704 220μH
RL752 AHY103
R754 150
C752 0.1
R753 68
RL751 AHY103
R752 47
C751 0.1
R751 100
C709 0.1
C705 0.1
C741 0.1
D985 1SS53
D984 1SS53
D983 1SS53
D982 1SS53
L761 220μH
R761 1k
D761 1SV263
R762 220
C761 0.1
R783 10
RL781 AHY103
RFRX
J781
FROM CTRL UNIT J2
D781 DAN222
DS1 HRS-4160A
RANT
J782
[RX ANT]
C781 0.0047
L781 82nH
L782 0.12μH
C782 0.0047
C783 33p
C784 75p
C785 82p
C786 15p
C787 47p
R782 10k
R781 2P-50-W1L301
Q781 DTC114EE
R801 4.7
IC801 μPC1678G
R807 10
5V
R803 20
R804 4.7
C803 0.1
C804 0.0047
L802 22μH
R806 100
L1002 0.12μH
R809 10
J821
PAI
FROM PA UNIT J1
C801 0.1
R802 330
C1001 0.1
C1008 12p
C1007 82p
C1009 82p
R808 470
R810 470
C602 100p
C604 180p
L603 0.27μH
L604 0.33μH
L601 0.39μH
L602 0.33μH
C606 27p
C608 8p
L605 100μH
D602 1SV265
C603 0.0012
C605 100p
C607 180p
C609 0.1
R601 100
C627 47p
C629 56p
L623 0.15μH
L624 0.15μH
L622 0.15μH
L625 0.15μH
C623 18p
C625 30p
L626 10μH
C628 270p
C622 68p
C624 82p
C626 68p
C630 0.0047
R621 100
C642 82p
C644 82p
L643 0.15μH
D642 1SV263
W261
L642 0.33μH
C646 18p
L645 10μH
C643 560p
C645 68p
C647 68p
R641 100
RF UNIT

Downloaded by
Amateur Radio Directory
www.hamdirectory.info

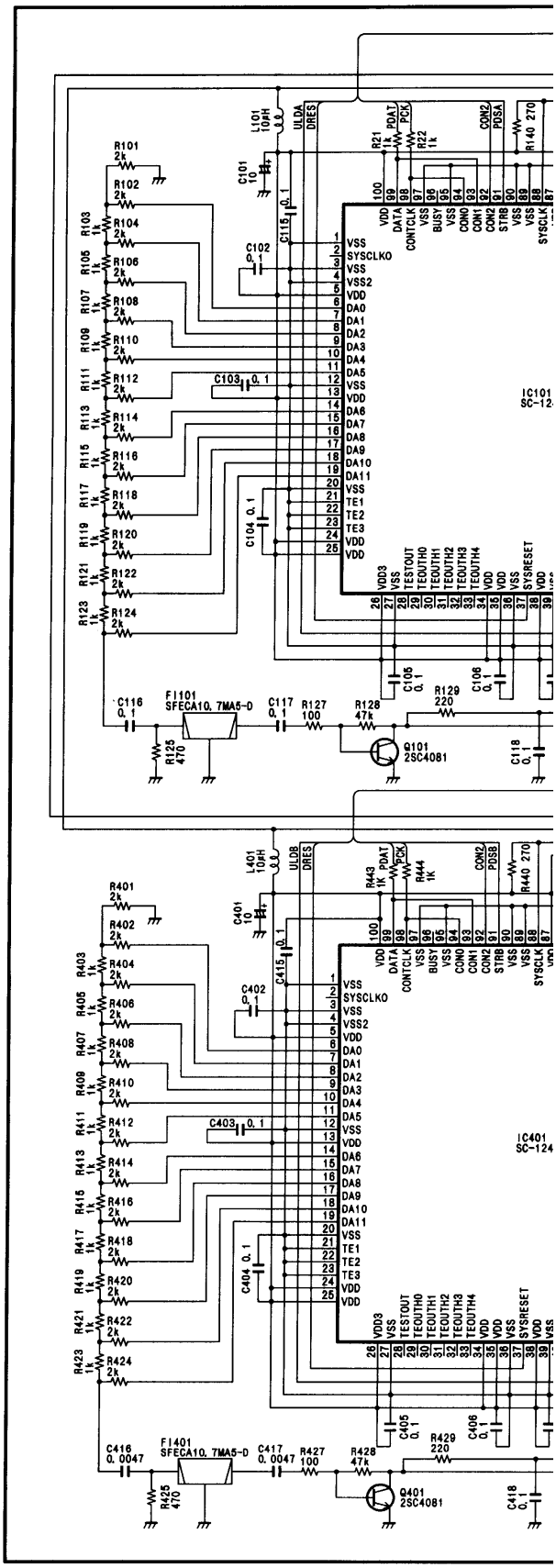

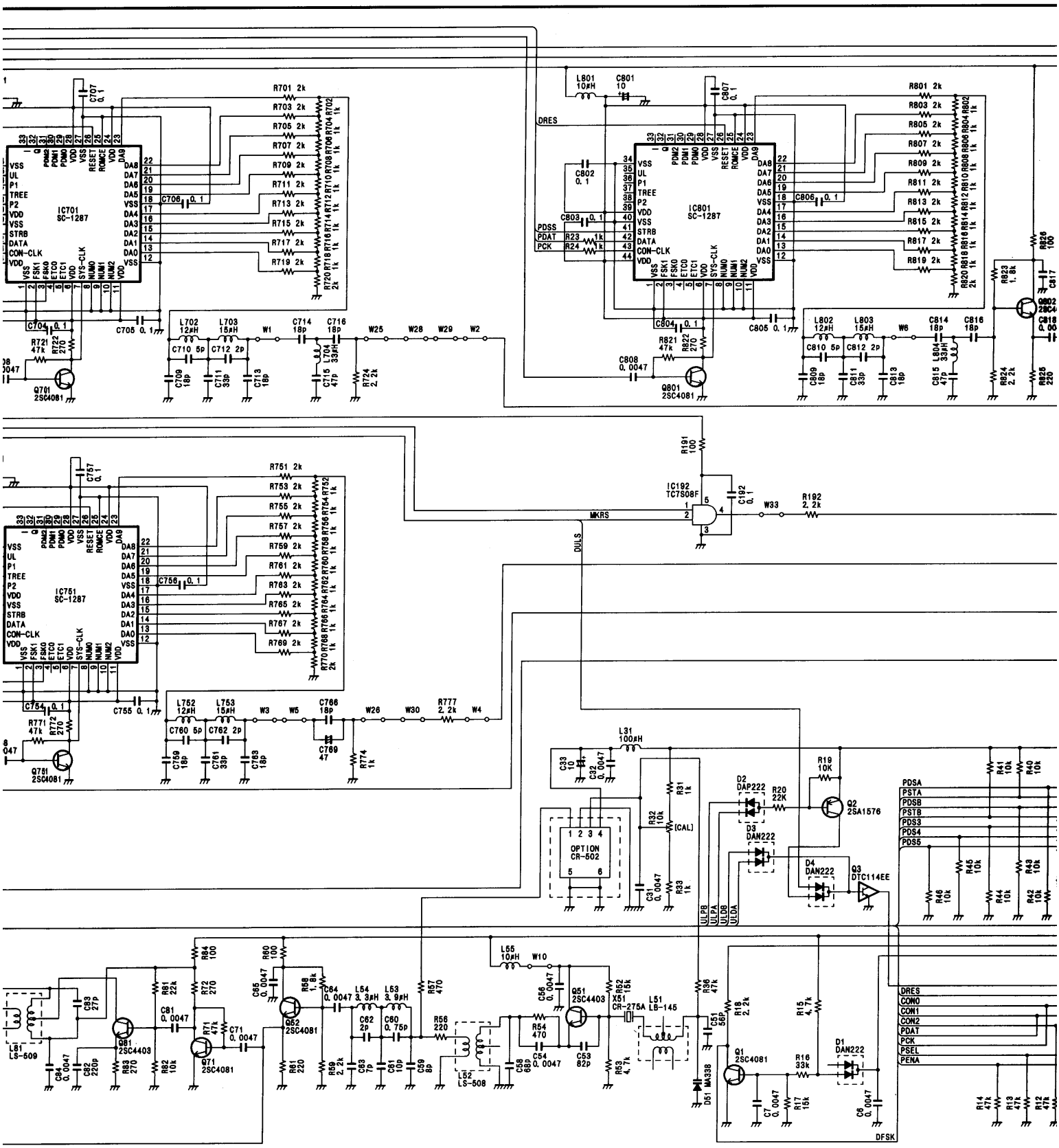
IC701 SC-1287
IC801 SC-1287
IC751 SC-1287
IC192 TC7S08F
DRES
PDSS
PDAT
PCK
MKRS
DULS
Q701 2SC4081
Q801 2SC4081
Q751 2SC4081
OPTION CR-502
[CAL]
D2 DAP222
D3 DAN222
D4 DAN222
Q2 2SA1576
Q3 DTC114EE
PDSA
PSTA
PDSB
PSTB
PDS3
PDS4
PDS5
ULPB
ULPA
ULDB
ULDA
L81 LS-509
Q81 2SC4403
Q71 2SC4081
Q52 2SC4081
Q51 2SC4403
X51 CR-275A
L51 LB-145
L52 LS-508
Q1 2SC4081
D1 DAN222
D51 MA338
DRES
CON0
CON1
CON2
PDAT
PCK
PSEL
PENA
DFSK

Downloaded by
Amateur Radio Directory
www.hamdirectory.info

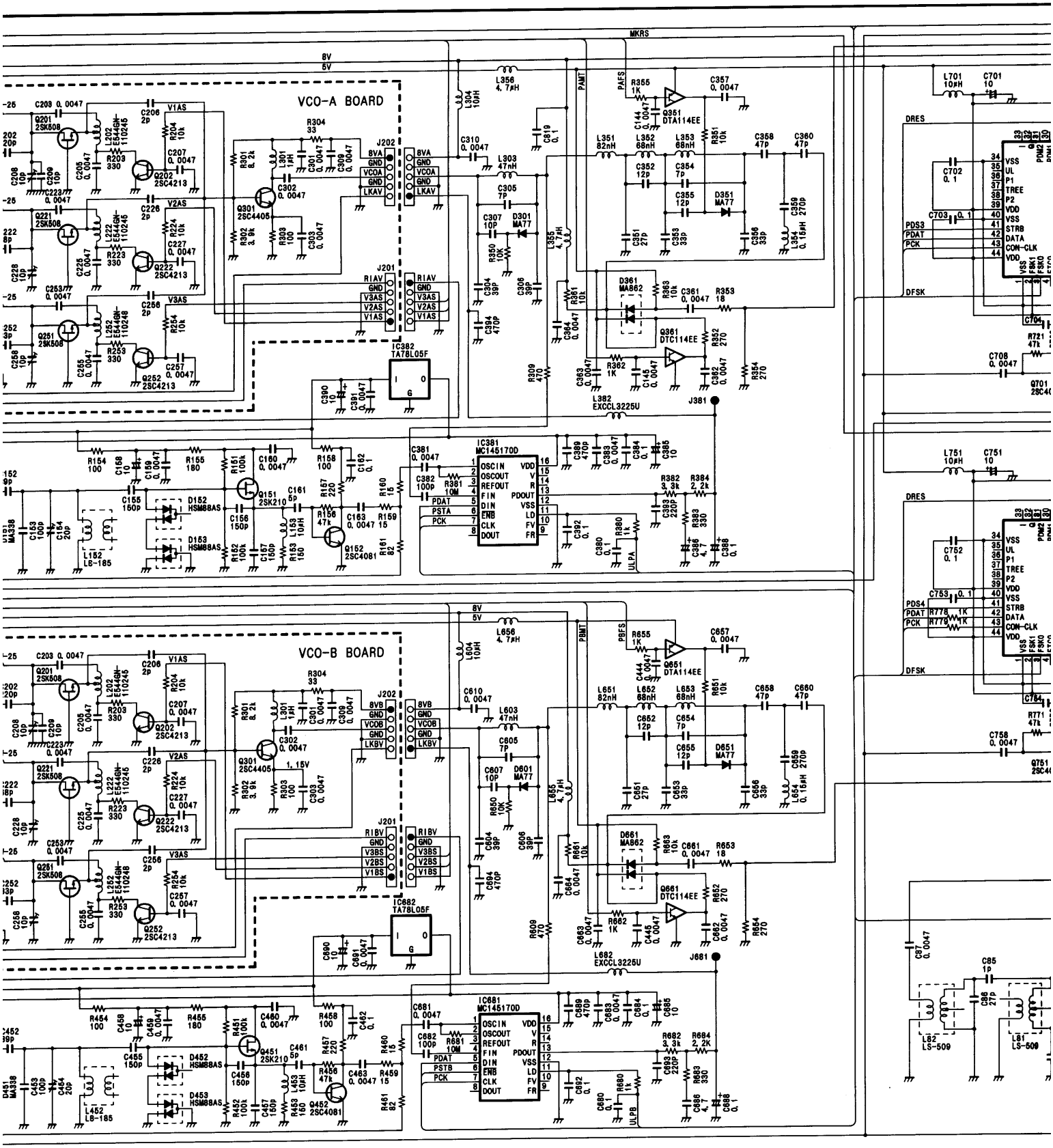

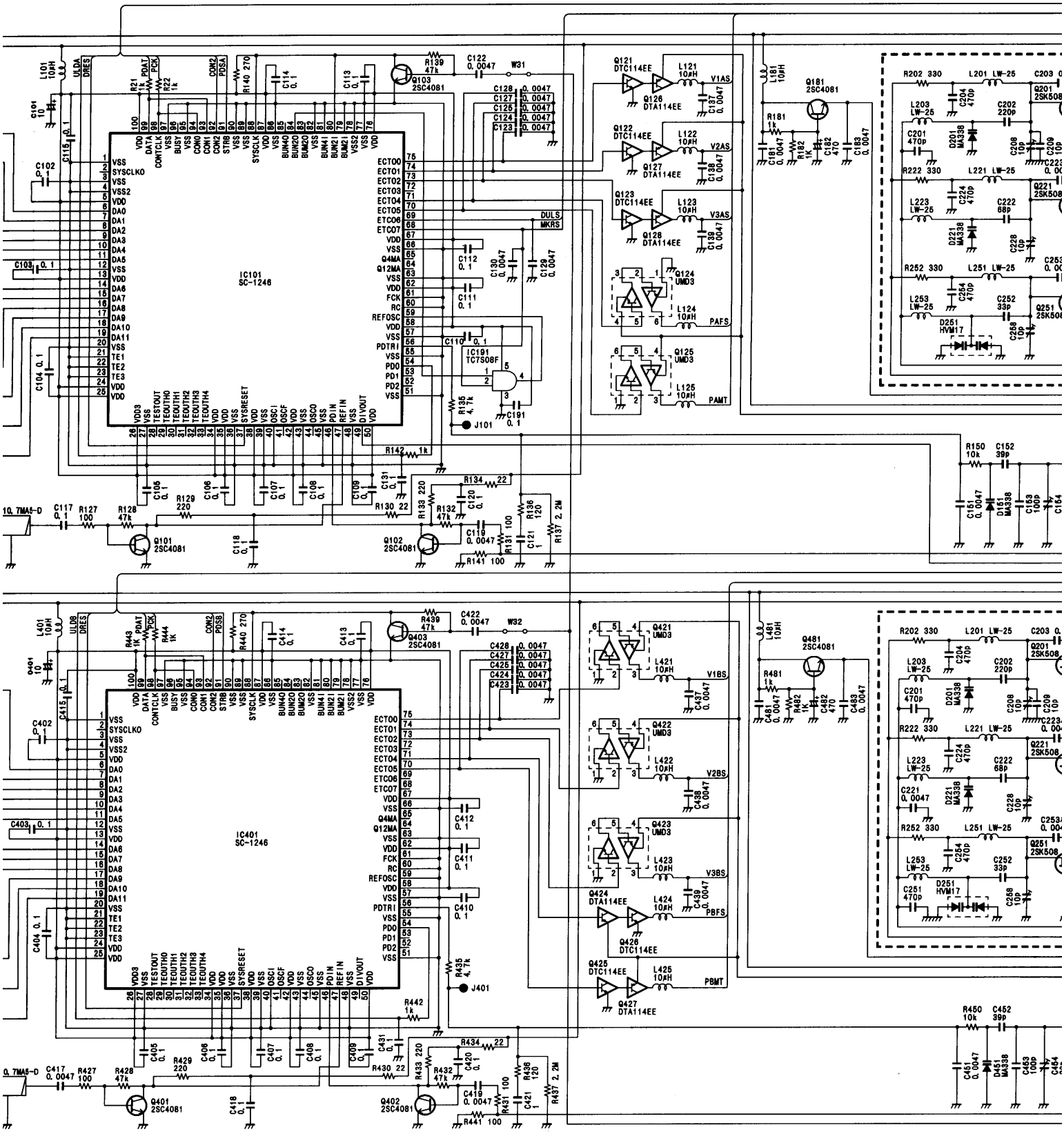
IC101
SC-1246
IC401
SC-1246
IC191
TC7S08F
J101
J401
Q101
2SC4081
Q102
2SC4081
Q103
2SC4081
Q401
2SC4081
Q402
2SC4081
Q403
2SC4081
Q181
2SC4081
Q481
2SC4081
Q126
DTA114EE
Q127
DTA114EE
Q128
DTA114EE
Q124
UMD3
Q125
UMD3
Q421
UMD3
Q422
UMD3
Q423
UMD3
Q424
DTA114EE
Q426
DTC114EE
Q425
DTC114EE
Q427
DTA114EE
Q121
DTC114EE
Q122
DTC114EE
Q123
DTC114EE
V1AS
V2AS
V3AS
PAFS
PAMT
V1BS
V2BS
V3BS
PBFS
PBMT
DULS
MKRS
W31
W32
D201
MA338
D221
MA338
D251
HVM17
D151
MA338
D451
MA338

Downloaded by
Amateur Radio Directory
www.hamdirectory.info

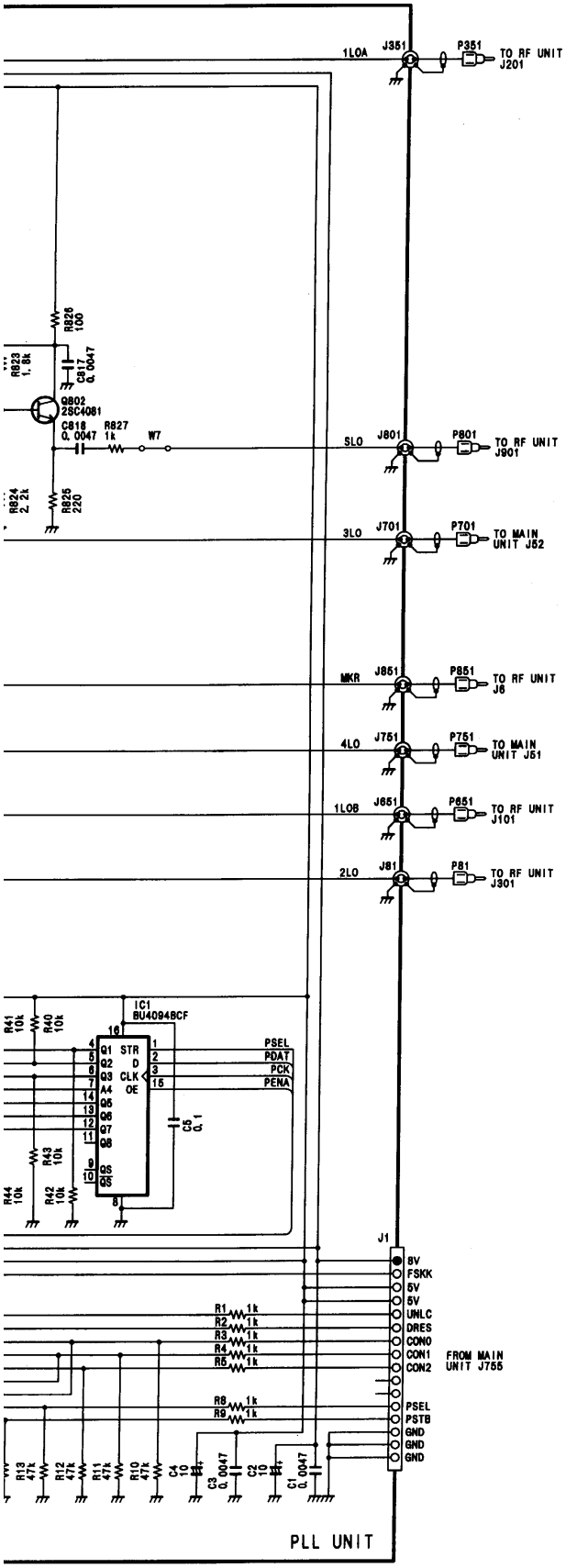

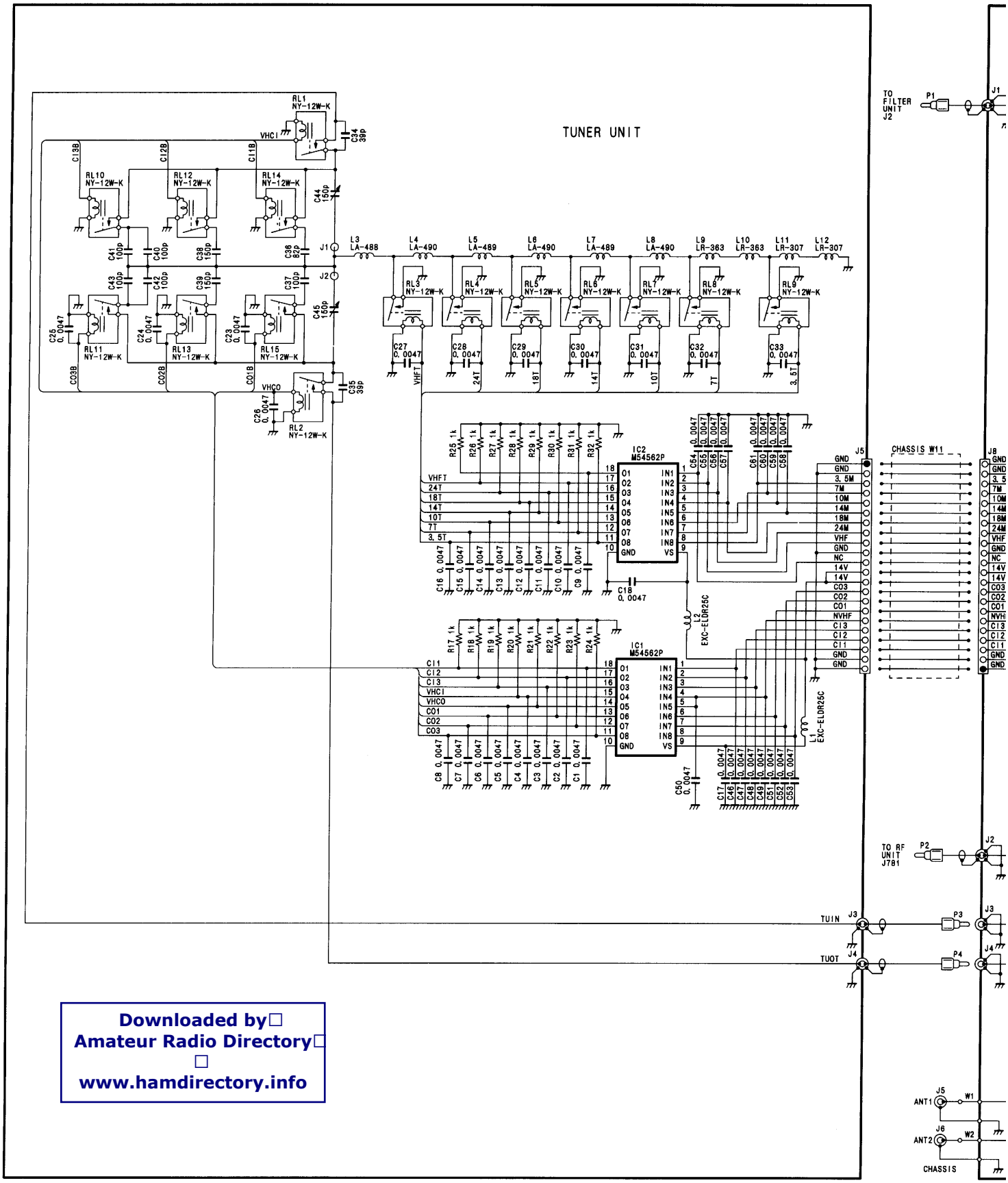

Downloaded by
Amateur Radio Directory
www.hamdirectory.info