AT-50 SCHEMATIC DIAGRAM

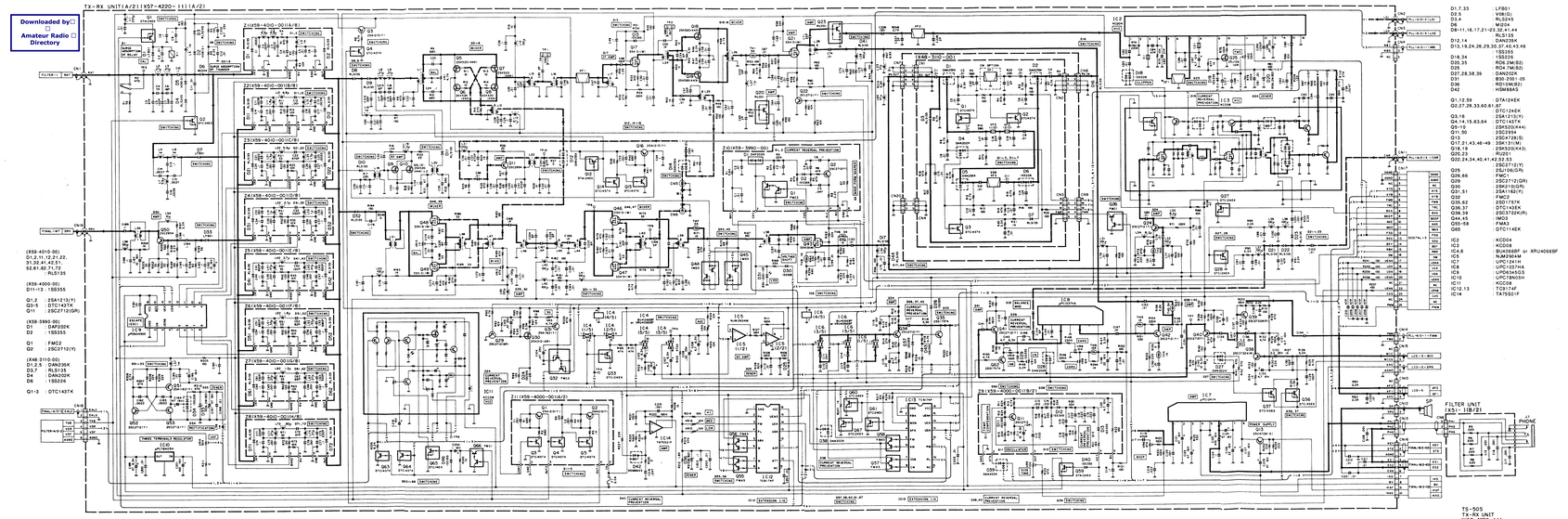

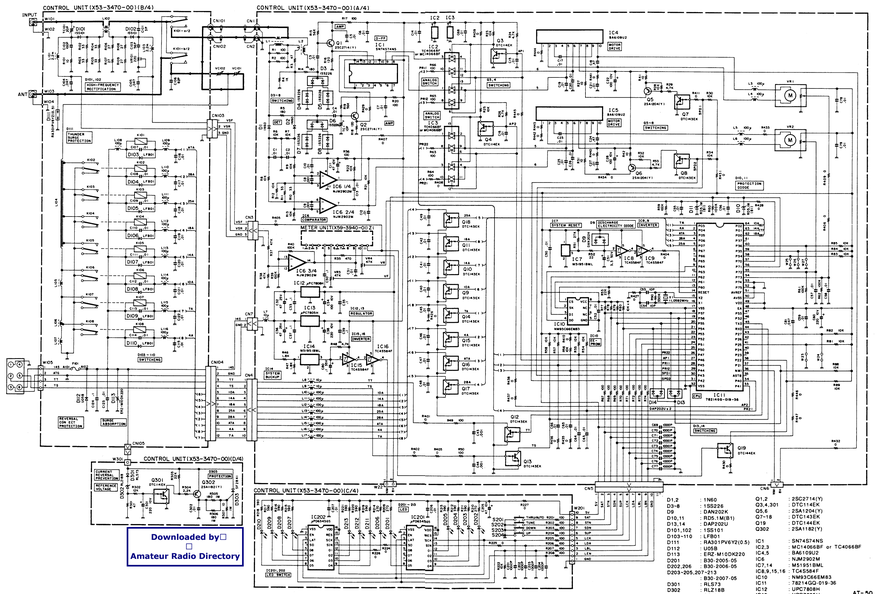

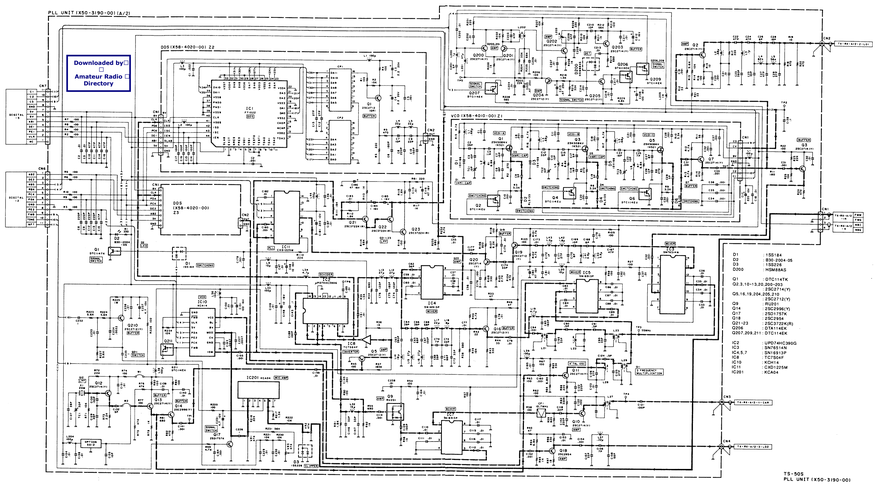

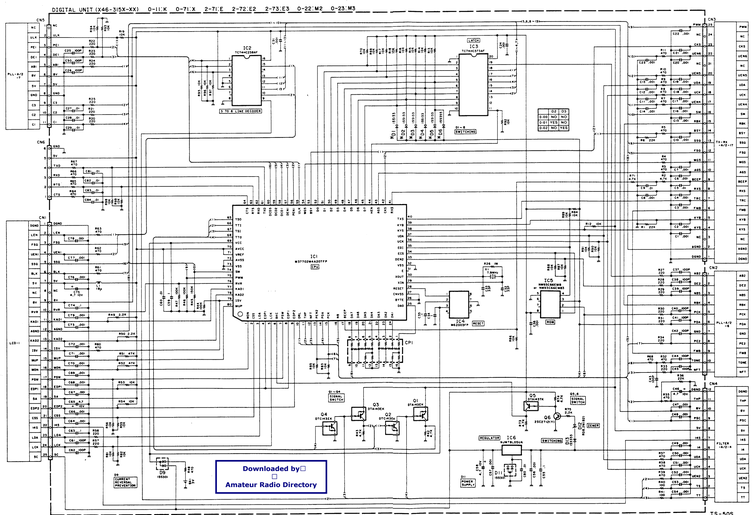

Note:
Circuit is subject to change without notice due to advancements in technology.